I44

1MP, Zoom Bullet with D/N, Adaptive IR, Extreme WDR, SLLS, 30x Zoom Lens

- 1 Megapixel with 720p
- Day & Night with Superior Low Light Sensitivity and Adaptive IR LED
- 30x Zoom Lens with f4.3 - 129mm / F1.6 - 5.0, DC Iris, Auto Focus
- Extreme WDR (145 dB)
- 30 fps at 1280 x 720
- Weatherproof (IP67) and Vandal Proof Metal Casing (IK10)

PHOTO INDICATION

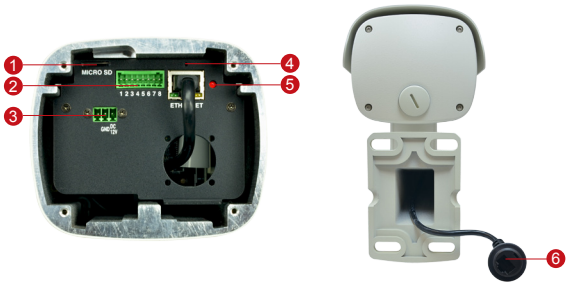

1. Memory Card Slot
2. Digital Input / Output and Audio-In / Audio-Out
3. DC 12V Power Input
4. Reset Button
5. Power LED
6. Ethernet Port

DIMENSION DIAGRAM

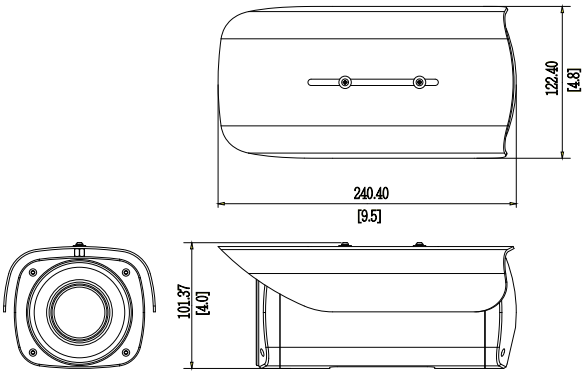

ACCESSORY OPTIONS

Power Supply		
PPOE-0001		IEEE 802.3af PoE Injector for Class 1, 2 or 3 devices, with universal adapter
PPBX-0002		Universal Power Adapter,100~240V, 4 different connectors included

Popular Mounting Solutions		
Ceiling	PMAX-1300	
Pole	PMAX-0504	
Gang Box	PMAX-0806	

* For more mounting solutions, please refer to Project Planner on www.acti.com

PRODUCT SPECIFICATION

	I44
• Device	
Device Type	Bullet Camera
Image Sensor	Progressive Scan CMOS
Sensor Size	1/2.8"
Day / Night	Yes
Effective Pixels	1944 (H) x 1224 (V) (2.38 MP)
Horizontal Resolution	1450 TVL
Low Light Sensitivity	Superior
Minimum Illumination	Color: 0.1 lux at F1.6 (30 IRE, 2400°K); B/W: 0 lux (IR LED on)
Color to B/W Switch	ISP based switch, configurable
Mechanical IR Cut Filter	Yes
IR Sensitivity Range	700~1100nm
IR LED	Adaptive IR LED (Object & Zoom Adaptive IR LED) x 27 (850 nm)
IR Working Distance	40 m (0 lux, 30 IRE, Gain 255, Auto shutter mode)
Electronic Shutter	1/5 ~ 1/2,000 sec (manual mode); 1/5 ~ 1/10,000 sec (auto mode)
S/N Ratio	56 dB
• Lens	
Focal Length / Aperture	Zoom, f4.3 - 129 mm / F1.6 - 5.0
Zoom Ratio / Speed	30x optical; 2.87 sec (wide to tele)
Iris	DC iris
Focus	Auto focus
Mount Type	Board mount
Horizontal Viewing Angle	65.1° ~ 2.34°
• Video	
Compression	H.264 HP, MJPEG
Max. Frame Rate vs. Resolution	30 fps at 1280 x 720; 30 fps at 800 x 600; 30 fps at 640 x 480; 15 fps at 320 x 240
Multi-Streaming	Simultaneous dual streams based on two configurations
Bit Rate	28 Kbps - 6 Mbps (per stream)
Bit Rate Mode	Constant, Variable
Image Enhancement	Extreme WDR (145 dB); White balance: automatic, hold and manual; Brightness; Contrast; Sharpness (auto); Auto gain control; 2D+3D digital noise reduction; Flickerless; Defogging
Text Overlay	User defined text on video
Image Orientation	Image flip and mirror
• Audio	
Compression	8kHz, Mono, PCM, 16 bit encoding, G.711
Audio-In	Terminal block
Audio-Out	Terminal block
• Network	
Protocol & Service	TCP, UDP, HTTP, HTTPs, DHCP, PPPoE, RTP, RTSP, IPv4, IPv6, DNS, DDNS, NTP, ICMP, ARP, IGMP, SMTP, FTP, UPnP, SNMP, Bonjour, Sony VISCA, Pelco-D, Pelco-P
Ethernet Port	1, Ethernet (10/100 Base-T), RJ-45 connector
Security	IP address filtering; HTTPs encryption; Password protected user levels; Anonymous login; IEEE802.1X network access control
• Alarm	
Alarm Trigger	Video motion detection (3 regions); External device through digital input; Sound detection
Alarm Response	Notify control center; Change camera settings; Command other devices; E-mail notification with snapshots; Save video or snapshot to local storage; Upload video or snapshot to FTP server; Activate external device through digital output
• Interface	
Digital Input	1, Terminal block
Digital Output	1, Terminal block
Local Storage	MicroSDHC/MicroSDXC card slot (card not included)
• General	
Power Source / Consumption	PoE Class 3 (IEEE802.3af) and DC 12V / 7.68 W (heater, fan and IR on)
Weight	2445 g (5.39 lb)
Dimensions (W x H x D)	122.4 mm x 101.37 mm x 240.4 mm (4.8” x 4.0” x 9.5”)
Environmental Casing	Weatherproof (IP67 rated); Vandal proof metal casing (IK10)
Mount Type	Wall, Pole, Ceiling, Gang box
Starting Temperature	-40 °C ~ 50 °C (-40 °F ~ 122 °F) within 30 mins
Operating Temperature	-40 °C ~ 50 °C (-40 °F ~ 122 °F)
Operating Humidity	10% ~ 85% RH
Approvals	CE (EN 55022 Class B, EN 55024), FCC (Part15 Subpart B Class B), IP67, NEMA 4X, IK10 (metal casing); UL (for optional PoE injector and power adapter)
• Integration	
Unified Solution	Fully compatible with ACTi software
ISV Integration	Software Development Kit (SDK) available; ONVIF compliant
GPS Position	Manual setting
Firmware Access Browser	Microsoft Internet Explorer 8.0 or newer (full functionality) Safari with QuickTime installed, and other browsers with VLC installed (partial functionality)

* All specifications are subject to change without notice.
* All brand names and registered trademarks are the property of their respective owners.