E13A

5MP f2.8mm Fixed Cube with WDR 74dB



- 5 Megapixel, f2.8mm, Fixed Cube

Specifications

Product Profile

Product Type	Fixed Cube
Application Environment	Indoor
Maximum Resolution	5MP
Image Sensor	Progressive Scan CMOS
Sensor Size	1/3.2 "
Effective Pixels	2592(H) X 1944(V) (5.04 MP)
Day / Night	No
Low Light Sensitivity	Standard
Minimum Illumination	Color: 0.1 lux at F2.0 (30 IRE, 2400 K)
Mechanical IR Cut Filter	No
Electronic Shutter	1/5-1/2000 second (manual mode); 1/5-1/10000 second (auto mode)
Horizontal Resolution (TV Lines)	1350 TVL
S/N Ratio	75 dB

Lens

Focal Length	Fixed focal, f2.8mm

Aperture	F2.0
Iris	Fixed iris
Focus	Manual focus
Lens Mount	CS Mount (interchangeable lens)
Horizontal Viewing Angle	92.6°
Vertical Viewing Angle	69.8°

Video

Compression	H.264 (Baseline/ Main/ High profile), MJPEG
Maximum Frame Rate vs. Resolution	15 fps at 2592 x 1944 15 fps at 2048 x 1536 30 fps at 1920 x 1080 30 fps at 1280 x 720 30 fps at 800 x 600 30 fps at 640 x 480 15 fps at 320 x 240
Bit Rate	28Kbps - 6Mbps
Bit Rate Mode	Constant, Variable
Multi-Streaming	Simultaneous dual streams
Digital Noise Reduction	DNR
Wide Dynamic Range	Basic WDR (74 dB)
Image Orientation	Flip, Mirror
Image Enhancement	White Balance, Brightness, Contrast, Sharpness, Automatic gain control (AGC), Flickerless
Privacy Mask	4 configurable regions
Text Overlay	Yes
On-Screen Graphics (Picture Overlay)	Yes
Server-based Analytics	Object Line Counting, People Counting, Face Detection, Object Based Motion Detection, Tamper, Object Line Crossing Detection, Object Enter Area Detection, Missing Object Detection, Unattended Object Detection, Smoke Detection, Heat Map, Dwell Time, People Queue Detection, (Require PC-based or standalone IVS or ALPR Server. Contact ACTi support for recommendations on how to maximize analytical accuracy)

Audio

Audio Type	2-way, Built-in Microphone, Line-out
Audio Compression	8 kHz, 16 bit encoding, Mono, PCM, G.711

Network

Network Protocol & Service	IPv4/v6, TCP, UDP, DHCP, PPPoE, HTTP, HTTPS, DNS, DDNS, NTP, RTP, RTSP, RTCP, SMTP, FTP, IGMP, ICMP, ARP, Bonjour, UPnP, QoS, SNMP, IEEE 802.1X
Ethernet Port	1 x RJ-45 connector
Security	IP address filtering, HTTPS encryption, Password protected user level, Anonymous login, IEEE 802.1X network access control, Standard IoT Security (anti-hacking, anti-malware)

Event

Event Trigger	Video motion detection (3 regions), Sound detection, Video streams loss, System log buffer overrun, Remove system log, Logon events (Login Failure, Login Success, Block an Account), SD Card Write Failure

Event Response	Notify control center, Change camera settings, Command other devices, E-mail notification with snapshots, Play the audio file, Push notification to mobile device, Save video to storage, Upload video or snapshot to FTP server, Upload video to NVR server

System

System Monitor	CPU loading, memory usage and network statistics via API
System Log	Support
Watchdog	Support

Integration

Unified Solution	Fully compatible with ACTi software
Software Development Kit	Yes
GPS Position	Manual setting
Edge Recording	Support (integration with NVR by ONVIF Profile G or proprietary protocol)*
ONVIF Compliant	Yes, Profile S, Profile G, Profile T, Profile Q
GB28181 Compliant	Yes
Web Browser	IE 11, Google Chrome, Microsoft Edge, Apple Safari
Auto Firmware Upgrade	Yes

Interface

Audio Interface	Built-in microphone, 3.5mm Phone Jack
Operating Button	Reset Button

General

Power Source	PoE Class 2 (IEEE802.3af)
Power Consumption	3.552 W (PoE)
Weight	241g (0.53lb)
Dimensions	(W x H x D): 96mm x 96mm x 45.07mm (3.8" x 3.8" x 1.8")
Bundled Accessories	Bracket
Mount Type	Bracket
Starting Temperature	-10°C ~ 45°C (14°F ~ 113°F)
Operating Temperature	-10°C ~ 45°C (14°F ~ 113°F)
Operating Humidity	10% - 85% RH, non-condensing
Approvals	CE Class B, FCC Class B, EAC, UL (for optional PoE injector)
Real-time Clock (RTC)	No
Warranty	3 Year(s). For extended warranty offering, see http://www.acti.com/support/warranty

* Edge Recording function is integrated with NVR 3 Corporate / NVR 3 Business / INR / GNR series.

Photo Indication

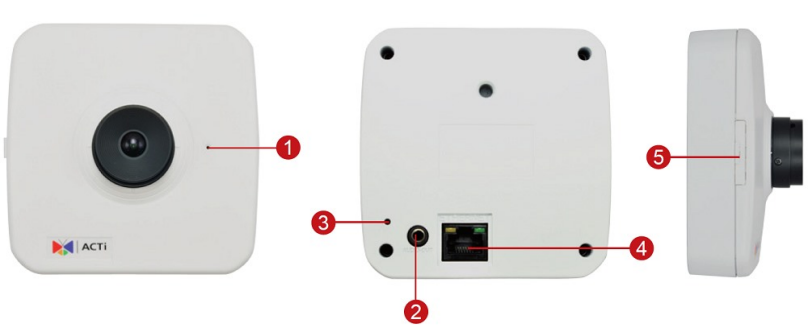

1. Built-in Microphone
2. Audio Output
3. Reset Button
4. Ethernet Port
5. Memory Card Slot

Dimension Diagram

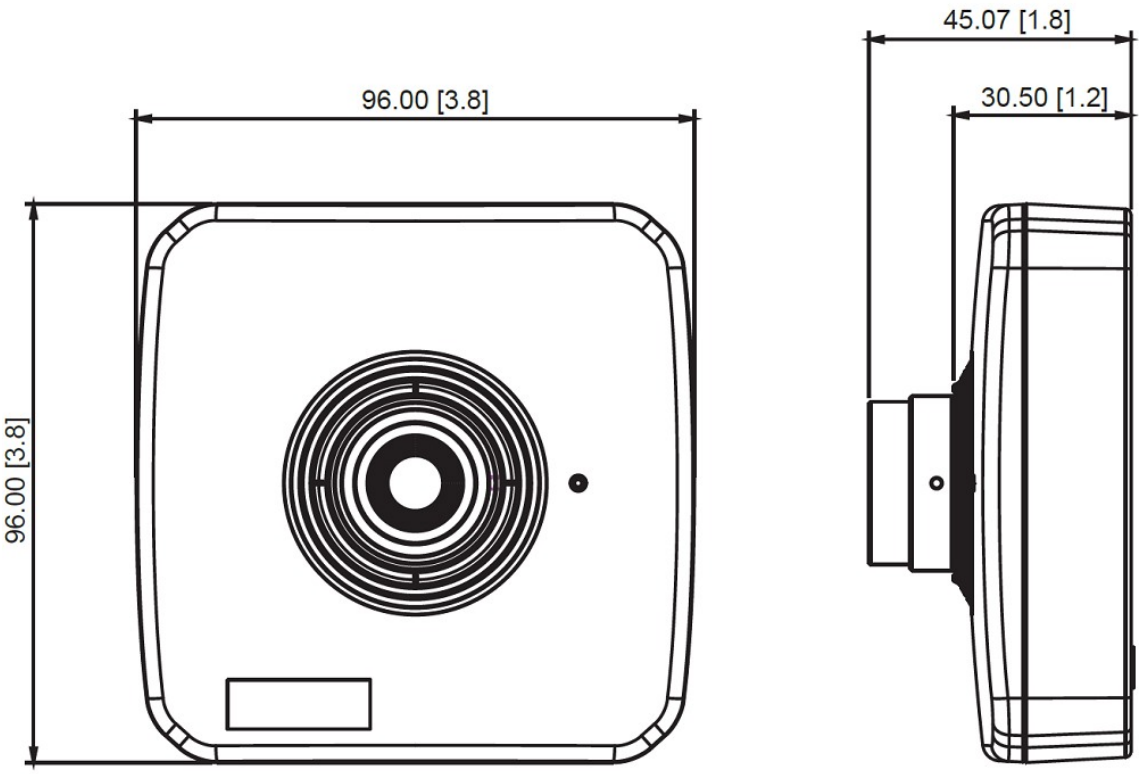

Unit: mm [inch]

Related Products

Lenses - Fixed Lens

PLEN-0101		Fixed Focal f4.2mm, Fixed Iris F1.8, Manual Focus, D/N, Megapixel, CS Mount Lens

Power Supply Accessories - PoE Injector

PPOE-0107		High PoE Injector IEEE 802.3at compliant, AC 100~240V, with universal connectors (for A416, A418, B913, B923, B934, Q450, Q75, VMGB-60X, Z37, Z71, Z952)

Network & Storage Peripherals - Data Switch

PPSW-0102		PLANET FGSD-1011HP 8-Port 802.3at PoE Switch (PoE Budget 120W)
PPSW-0105		PLANET GS-4210-8P2C 8-Port Gigabit 802.3at Managed PoE Switch (PoE Budget 120W)
PPSW-1101		PLANET GS-4210-24PL4C 24-Port Gigabit 802.3at Managed PoE Switch (PoE Budget 440W)
PPSW-3100		PLANET FGSW-1816HPS 16-Port 802.3at PoE Switch (PoE Budget 220W)

Extenders - PoE Extender

PPEX-0100		Veracity OUTREACH Max Power over Ethernet (PoE) Extender

Extenders - PoE over Coaxial Extender Kit

PPOC-0100		Planet LRP-101C-KIT Power over Coax Adapter Kit