Outdoor Zoom Dome

Hardware Manual

K81, K82, K83

Ver. 2026/03/19

ACTi
Connecting Vision

Table of Contents

Precautions 3

Safety Instructions **5**

Introduction 6

List of Models **6**
Package Contents **7**
Physical Description **8**
Mounting Options **9**

Installation Procedures 10

Step 1: Prepare for Installation **10**
Step 2: Route the Cables **11**
Step 3: Mount the Camera **12**
Step 4: Connect and Manage the Cables **13**
Using the Cable Gland 13
Using a Power Adapter (Optional) 16
Step 5: Connect to Network **16**
Step 6: Access the Camera Live View **16**
Step 7: Adjust the Viewing Angle and Orientation **17**
Step 8: Close the Dome Cover **17**

Accessing the Camera 18

Configure the IP Addresses **18**
Using DHCP Server to Assign IP Addresses 18
Using the Default Camera IP Address 19
Access the Camera **21**

Precautions

Read these instructions

You should read all the safety and operating instructions before using this product.

Heed all warnings

You must adhere to all the warnings on the product and in the instruction manual. Failure to follow the safety instruction given may directly endanger people, cause damage to the system or to other equipment.

Servicing

Do not attempt to service this video device yourself as opening or removing covers may expose you to dangerous voltage or other hazards. Refer all servicing to qualified service personnel.

Trademarks

All names used in this manual are probably registered trademarks of respective companies.

Liability

Every reasonable care has been taken during the writing of this manual. Please inform your local office if you find any inaccuracies or omissions. We cannot be held responsible for any typographical or technical errors and reserve the right to make changes to the product and manuals without prior notice.

Federal Communications Commission Statement

This device complies with Part 15 of the FCC Rules. Operation is subject to the following two conditions: (1) this device may not cause harmful interference, and (2) this device must accept any interference received, including interference that may cause undesired operation.

Caution: The user is cautioned that changes or modifications not expressly approved by the party responsible for compliance could void the user's authority to operate the equipment.

NOTE: This equipment has been tested and found to comply with the limits for a Class A digital device, pursuant to part 15 of the FCC Rules. These limits are designed to provide reasonable protection against harmful interference when the equipment is operated in a commercial environment. This equipment generates, uses, and can radiate radio frequency energy and, if not installed and used in accordance with the instruction manual, may cause harmful interference to radio communications. Operation of this equipment in a residential area is likely to cause harmful interference in which case the user will be required to correct the interference at his own expense.

LVD / EMC Directive

This product complies with the European Low Voltage Directive 2014/35/EU and EMC Directive 2014/30/EU.

WEEE Directive–2012/19/EU

The product this manual refers to is covered by the Waste Electrical & Electronic Equipment (WEEE) Directive and must be disposed of in a responsible manner.

Battery Directive-2013/56/EC

Battery in the product complies with the European Battery Directive 2013/56/EC.For proper recycling,return the battery to your supplier or to a designated collection point.

Safety Instructions

Cleaning

Disconnect this video product from the power supply before cleaning.

Attachments

Do not use attachments not recommended by the video product manufacturer as they may cause hazards.

Water and Moisture

Install other devices (such as PoE injector, alarm, etc.) that will be used with the camera in a dry place protected from water.

Servicing

Do not attempt to service this video product yourself as opening or removing covers may expose you to dangerous voltage or other hazards. Refer all servicing to qualified service personnel.

Damage Requiring service

Disconnect this video product from the power supply immediately and refer servicing to qualified service personnel under the following conditions.

1) When the power-supply cord or plug is damaged
2) If liquid has been spilled, or objects have fallen into the video product.
3) If the video product has been directly exposed to rain or water.
4) If the video product does not operate normally by following the operating Instructions in this manual. Adjust only those controls that are covered by the instruction manual, as an improper adjustment of other controls may result in damage, and will often require extensive work by a qualified technician to restore the video product to its normal operation.

Safety Check

Upon completion of any service or repairs to this video product, ask the service technician to perform safety checks to determine if the video product is in proper operating condition.

- Never look at the transmit laser while the power is on. Never look directly at the fiber ports and the fiber cable ends when they are powered on.
- Use of controls or adjustments to the performance or procedures other than those specified herein may result in hazardous laser emissions.

Introduction

List of Models

This hardware manual contains the following models:

K81		2MP Deep Learning AI 4.3x Outdoor Zoom Dome with IR LED 60m, WDR 130dB
K82		4MP Deep Learning AI 4.3x Outdoor Zoom Dome with IR LED 60m, WDR 130dB
K83		5MP Deep Learning AI 4.3x Outdoor Zoom Dome with IR LED 60m, WDR 130dB

Package Contents

Check if the camera package comes with the following items:

Camera	Cable Gland with Rubber and Washer	Wrench
Mounting Screw Kit	**Connector Rubber Cover**	**Drill Template**
		Drill Template
Quick Guide & Warranty Card		
Warranty Card		

IMPORTANT: When the camera is taken out from the box, the lens cover is covered by a thin film. DO NOT remove this film. It is used to protect the lens cover from scratches or fingerprint marks which may happen during installation. Remove this film only after the camera is securely installed and all connections are complete.

Physical Description

Item		Description
1	Built-in Microphone	Received audio input.
2	Reset Button	Restores the camera to its factory default settings. To reset the camera, use a pin to press and hold the Reset Button for about 15 seconds. **NOTE:** Perform this operation within 10 minutes after the device is powered on, otherwise, the reset will fail.
3	Memory Card Slot	Insert a memory card into this slot for local recording purposes.
4	DC 12V Power Input	In case the camera is connected to a non-PoE (Power over Ethernet) switch, use this connector to connect the camera to an external power adapter (not included). See *Using a Power Adapter (Optional)* on page 16 for more information.
5	Ethernet Port	Connects to a network using an Ethernet cable with RJ-45 connector.

Mounting Options

Select the most suitable solution for your installation environment. The camera can be mounted by either of the following methods:

Mount Types	Accessories
Surface Mount	Suitable when mounting the camera directly on walls or ceilings without additional mounting accessories. See *Installation Procedures* on page 10 for more information.
Wall Mount	Suitable when mounting the camera on the wall with the camera facing down as if installed on the ceiling. The Wall Mount (optional mounting accessory) is required for this type of installation.
Pendant Mount	Suitable when installing the camera on high ceilings where a straight tube is used to lower the camera. The Pendant Mount with Mount Kit (optional accessory set) is required for this type of installation.
Pole mount	Suitable when installing the camera on a vertical pole. The Pole mount (optional accessory set) is required for this type of installation.

NOTE:

- For more information about the mounting solutions and accessories, please check the *Mounting Accessory Selector* in our website (http://www.acti.com/mountingselector).
- Mounting accessories are not included in the package. Contact your sales agents to purchase.

Installation Procedures

This section describes procedures in mounting the camera on a flat surface.

NOTE: The camera images on this documentation are for reference only and may be different from the actual camera.

Step 1: Prepare for Installation

1. Before installing the camera, prepare the additional accessories required for installation.

2. Determine whether the cable will go through a hole on the surface or be routed along the surface. Note also the direction to which the cable will be routed to attach the bundled drill template on the surface according to the direction of the cable.

3. Drill the screw holes. Depending on the material of the surface where the camera will be installed, it may be necessary to use the supplied screw tox. It is also recommended to use the optional Junction Box to house the camera cable.

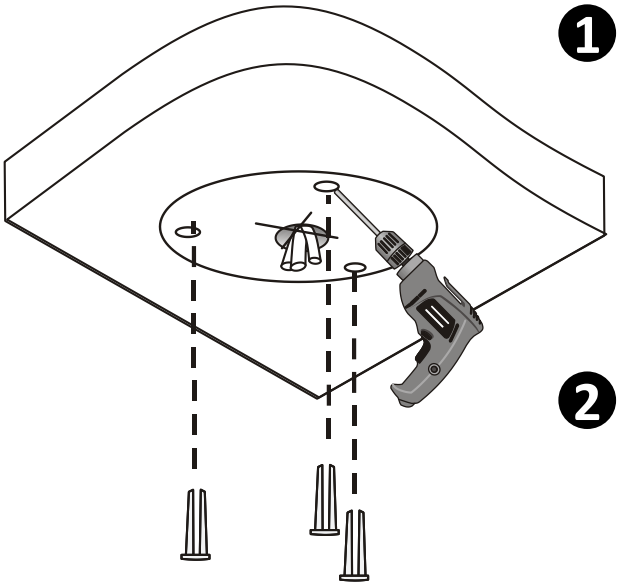

4. Loosen the three (3) screws using the bundled wrench then lift the dome cover.

   NOTE:

   - The dome cover is attached to the camera body by a safety strap; do not abruptly lift the dome cover!

5. If a memory card will be used for local recording, insert the card into the slot, at this point, with its metal contacts card facing the lens. Push the card until it clicks into place.

Step 2: Route the Cables

Determine whether the cable will pass through a hole on the surface or be routed along the surface:

***If the cable will pass through a hole on the surface*:**

1. Drill the hole for the cable on the surface. Or, use the optional Junction Box to house the camera cable inside the box.

2. Route the cable from the network side and connect it to the Ethernet port of the camera.

NOTE: If the camera will be installed outdoors or in places wherein environmental factors change drastically, make sure to waterproof the cable connection; see *Using the Cable Gland* on page 13 for instructions.

3. Push the cable through the hole on the surface.

4. Skip to *Step 3: Mount the Camera* on page 12.

***If the cable will be routed along the surface,* route the cable through the gap on the camera side.**

Step 3: Mount the Camera

1. Mount the camera to the surface using the three (3) bundled screws.
2. Connect all the cables inside

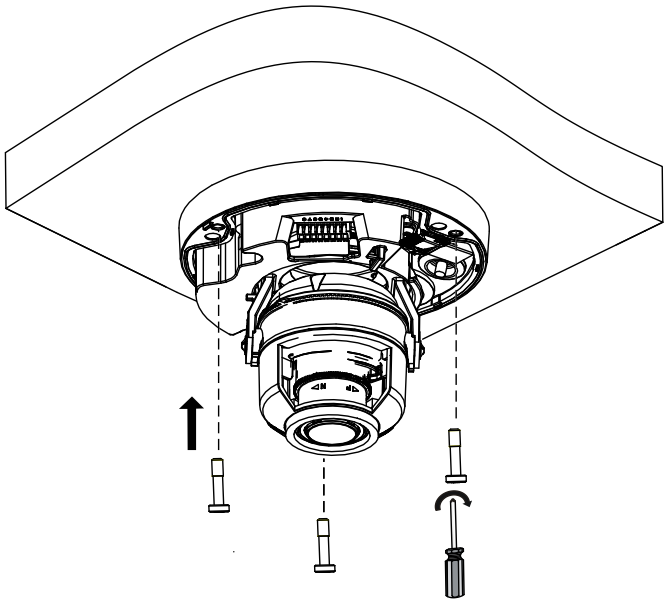

3. Pan and adjust the camera tilt angle, as needed.

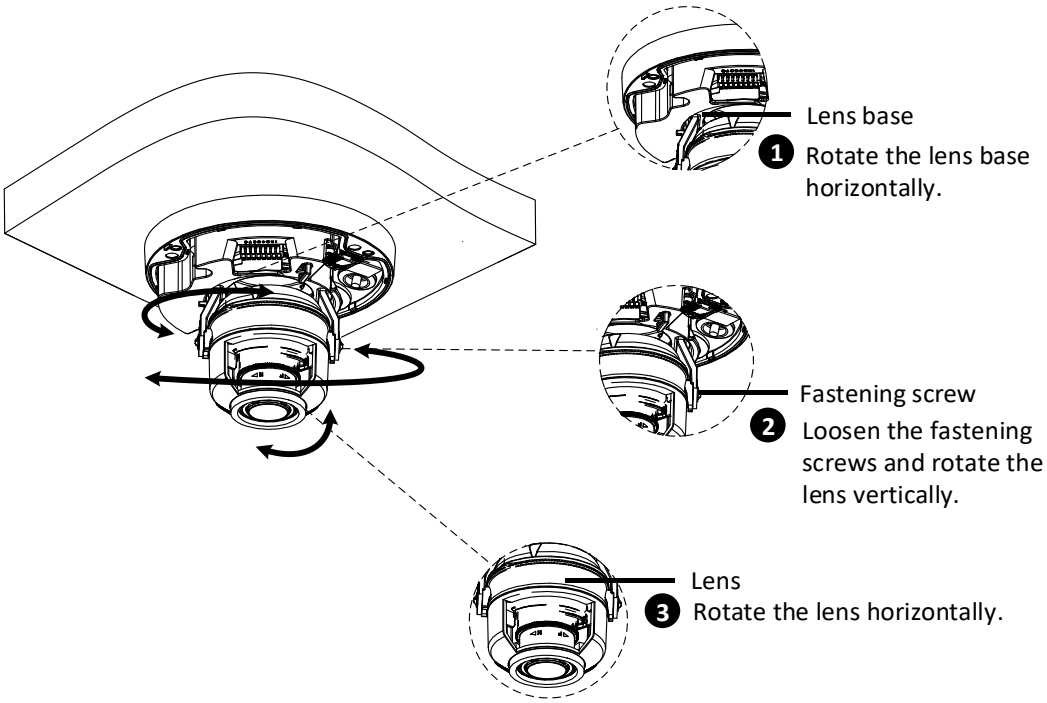

Step 4: Connect and Manage the Cables

The camera and the pre-installed network cable, “pigtail”, are resistant to salt, water, weak acid, alcohol, oil, grease and other common solvents. If the camera will be installed indoors, simply connect the network side cable to the camera Ethernet port.

However, if the camera will be installed outdoors, ensure that the cable connections are protected from different environmental factors. Use the bundled cable gland to protect the Ethernet connection and use a waterproof tape to protect other cable connections. For other cable connections, such as a power adapter, see *Using a Power Adapter (Optional)* on page 16 for more details.

DISCLAIMER: ACTi will not be responsible for camera damage caused by water entering the cable connections.

Using the Cable Gland

This section describes how to waterproof the cable-out or “pigtail” of the camera using the bundled cable gland. Before connection, prepare an exterior-grade Ethernet cable with RJ-45 connector without sleeve.

Perform the following to waterproof the “pigtail” using the cable gland:

1. Attach the washer to the Ethernet connector of the camera.

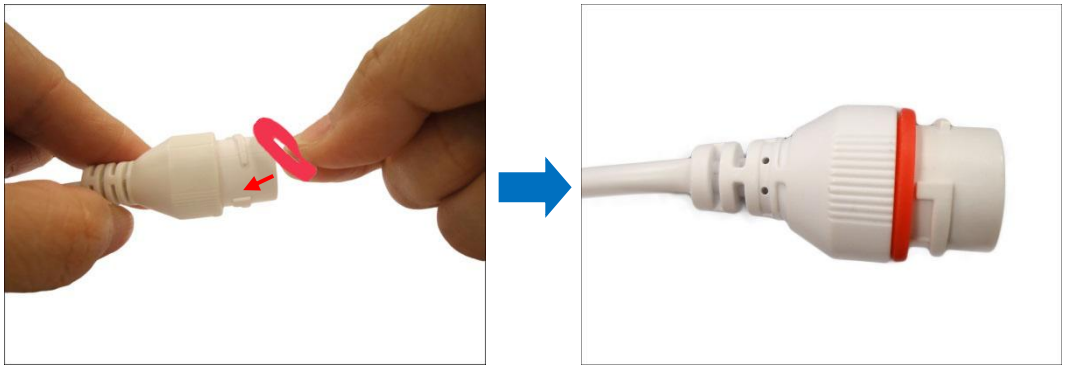

2. Detach the clamping nut and sealing insert from the gland body:

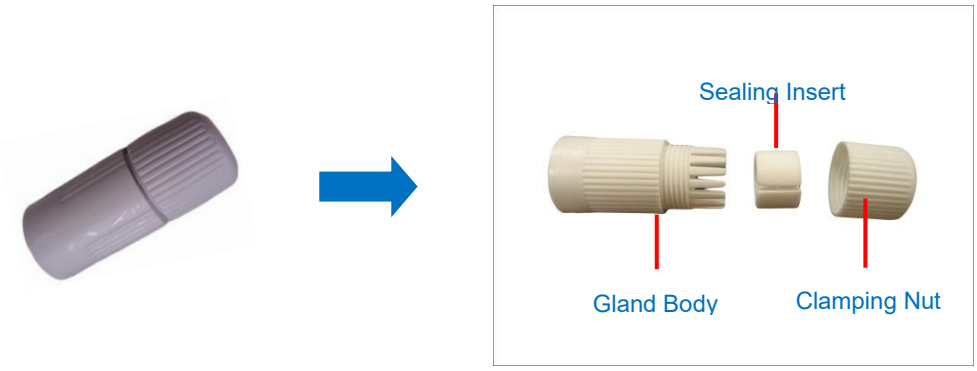

3. Insert the clamping nut into the Ethernet cable.

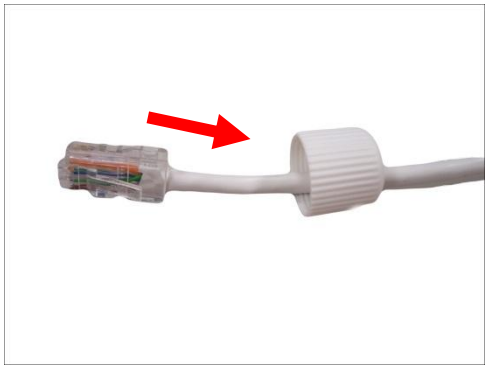

4. Insert the sealing insert through the Ethernet cable.

5. Insert the cable through the gland body.

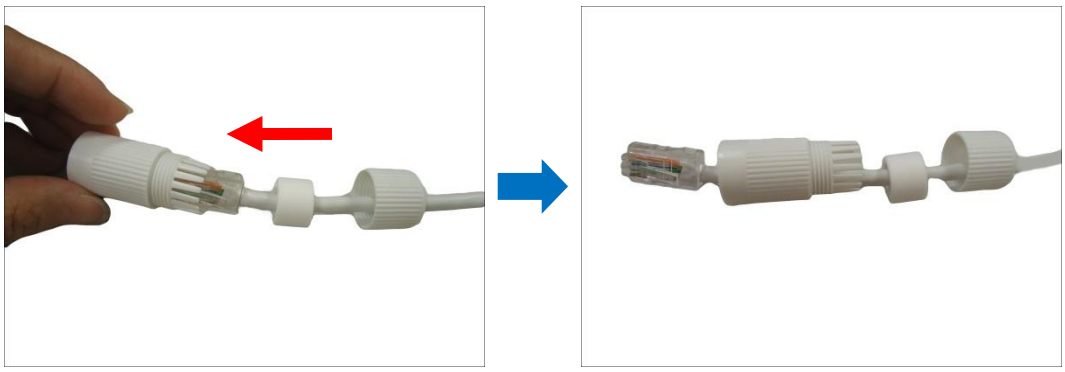

6. Push the sealing insert into the gland body.

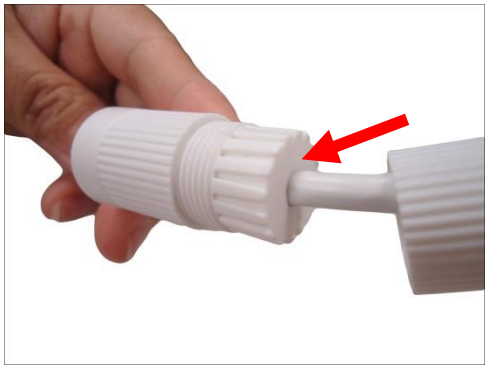

7. Connect the RJ-45 connector to the camera connector.

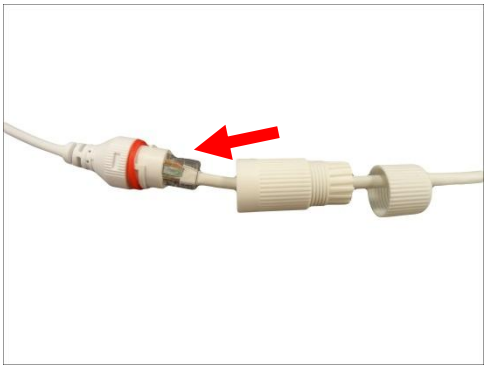

8. Attach the gland body to the camera connector.

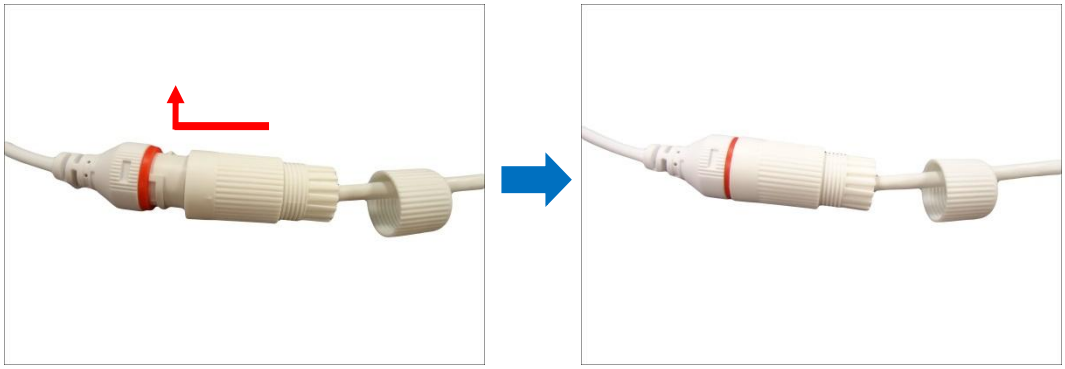

9. Attach the clamping nut to the gland body to complete the cable solution.

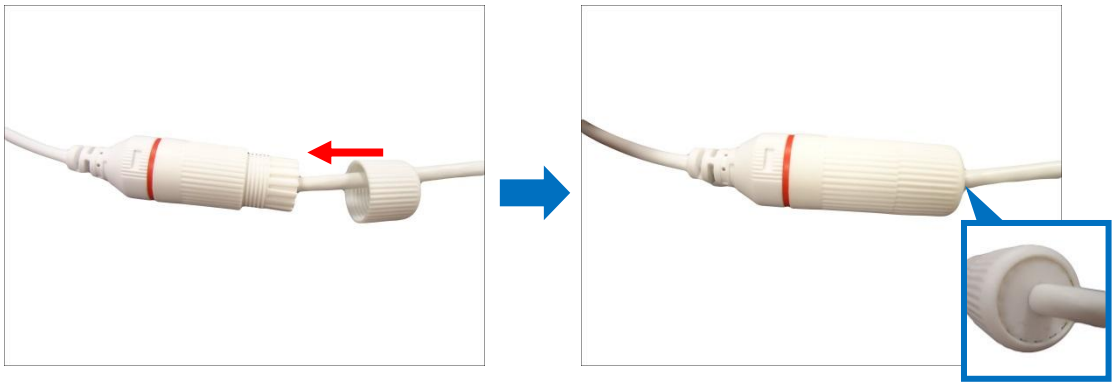

NOTE: Make sure the clamping nut is tightly attached to the cable gland body and the sealing insert is squeezed tightly.

Using a Power Adapter (Optional)

The camera can be powered by a Power over Ethernet (PoE) switch that is IEEE802.3af compliant. In case of using a non-PoE switch or your PoE switch has limited power supply, you can purchase a power adapter and directly connect the camera to a power outlet.
After connecting the power adapter, make sure to protect the cable connection.

NOTE:

- The power adapter is not bundled in the package.
- Use the connector rubber cover if this connector is not used.
- Wrap the cable connectors with waterproof tape if the cable connections is exposed outdoors.

Step 5: Connect to Network

Connect the other end of the network cable to a switch or injector. Then, connect the switch or injector to a network or PC and a power source. See Power-over-Ethernet (PoE) example connection diagram below.

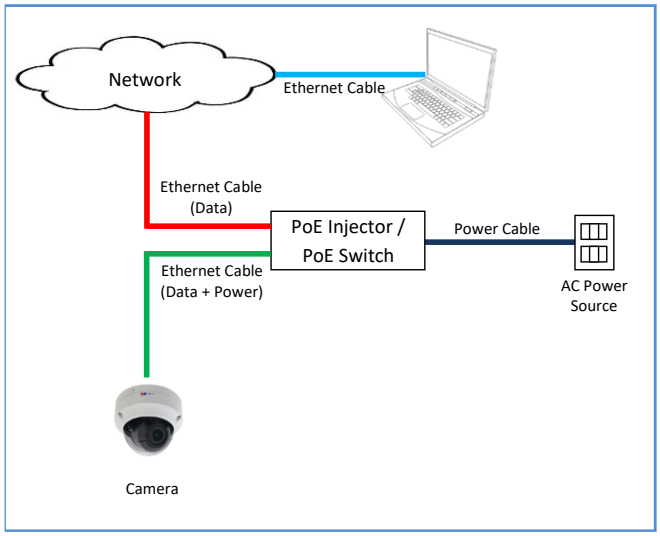

Step 6: Access the Camera Live View

See *Accessing the Camera* on page 18 for more information on how to access the Live View of the camera.

Step 7: Adjust the Viewing Angle and Orientation

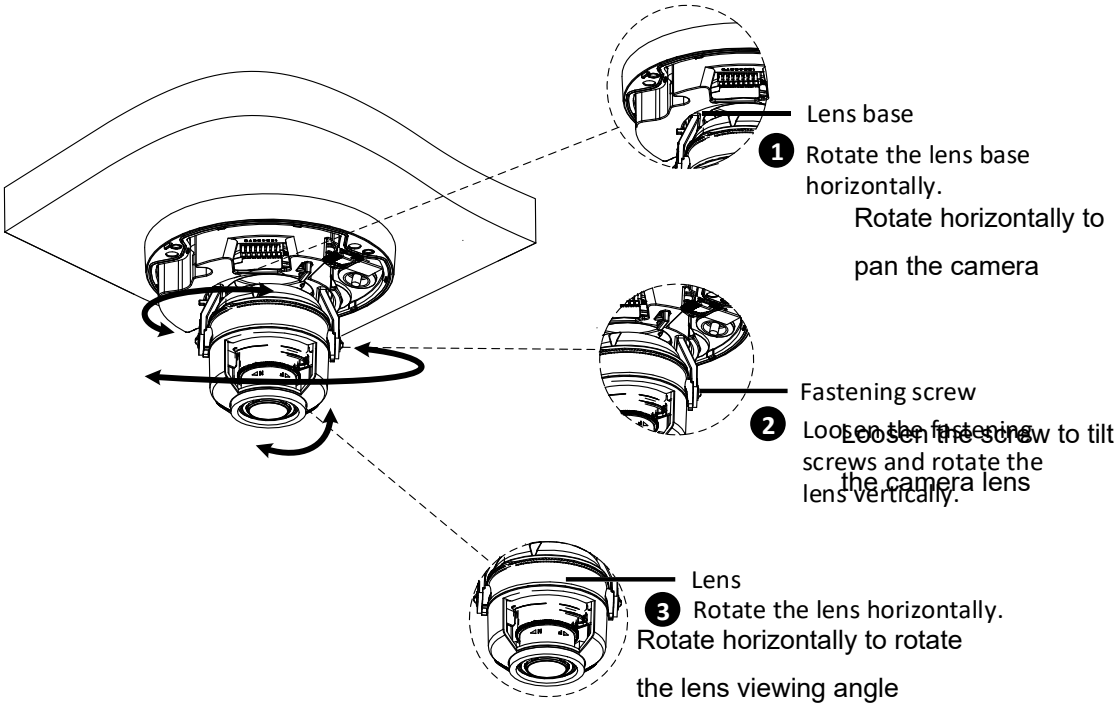

Step 8: Close the Dome Cover

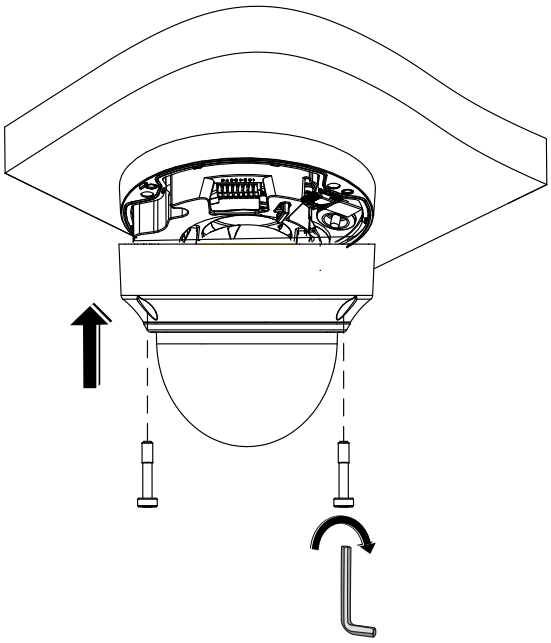

Accessing the Camera

Configure the IP Addresses

In order to be able to communicate with the camera from your PC, both the camera and the PC have to be within the same network segment. In most cases, it means that they both should have very similar IP addresses, where only the last number of the IP address is different from each other. There are 2 different approaches to IP Address management in Local Area Networks – by DHCP Server or Manually.

Using DHCP Server to Assign IP Addresses

If you have connected the computer and the camera into the network that has a DHCP server running, then you do not need to configure the IP addresses at all – both the camera and the PC would request a unique IP address from DHCP server automatically. In such case, the camera will immediately be ready for the access from the PC. The user, however, might not know the IP address of the camera yet. It is necessary to know the IP address of the camera in other to be able to access it by using a Web browser.

If you work with our cameras regularly, there is a better way to discover the cameras in the network – by using IP Utility. The IP Utility is a light software tool that can not only discover the cameras, but also list lots of valuable information, such as IP and MAC addresses, serial numbers, firmware versions, etc, and allows quick configuration of multiple devices at the same time.

The IP Utility can be downloaded for free from http://www.acti.com/IP_Utility
With just one click, you can launch the IP Utility and there will be an instant report as follows:

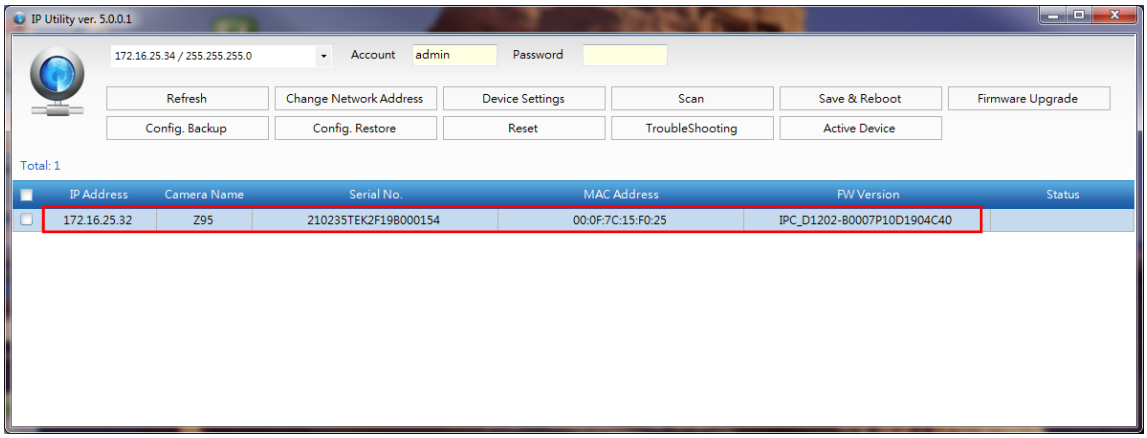

You can quickly see the camera model in the list. Double-click on the IP address to automatically launch the default browser of the PC with the IP address of the target camera filled in the address bar of the browser already.

Using the Default Camera IP Address

If there is no DHCP server in the given network, the user may have to assign the IP addresses to both PC and camera manually to make sure they are in the same network segment.

When the camera is plugged into network and it does not detect any DHCP services, it will automatically assign itself a default IP:

192.168.0.100

Whereas the default port number would be 80. In order to access that camera, the IP address of the PC has to be configured to match the network segment of the camera.

Manually adjust the IP address of the PC:

In the following example, based on Windows 7, we will configure the IP address to 192.168.0.99 and set Subnet Mask to 255.255.255.0 by using the steps below:

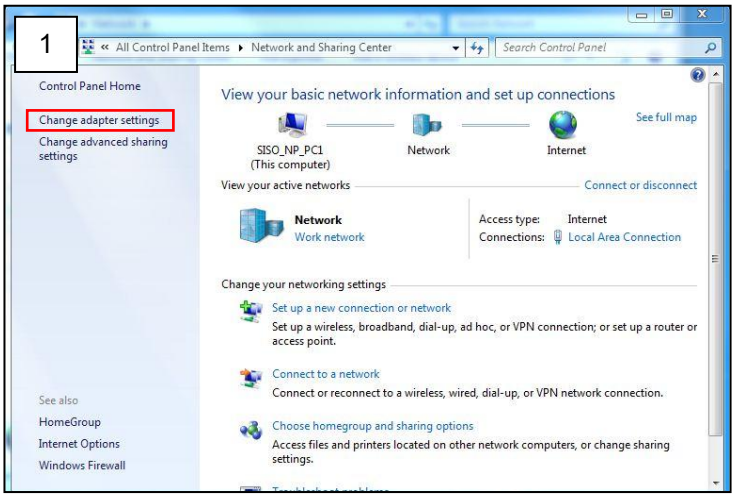

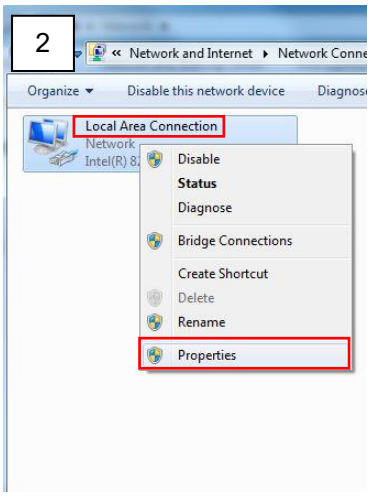

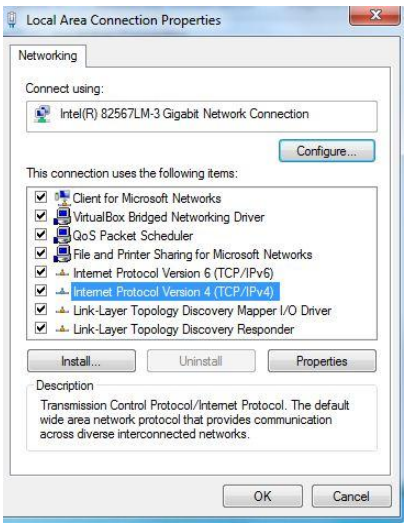

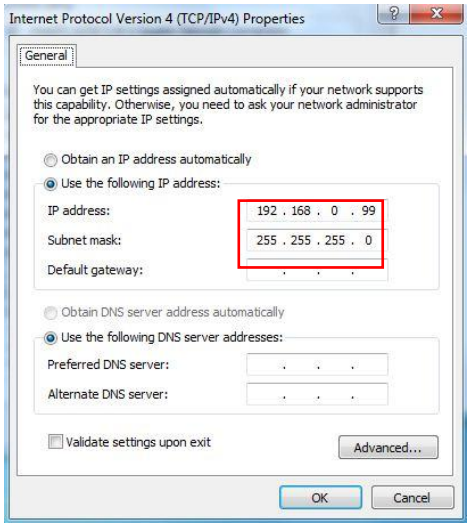

Manually adjust the IP addresses of multiple cameras:

If there are more than 1 camera to be used in the same local area network and there is no DHCP server to assign unique IP addresses to each of them, all of the cameras would then have the initial IP address of 192.168.0.100, which is not a proper situation for network devices – all the IP addresses have to be different from each other. The easiest way to assign cameras the IP addresses is by using IP Utility:

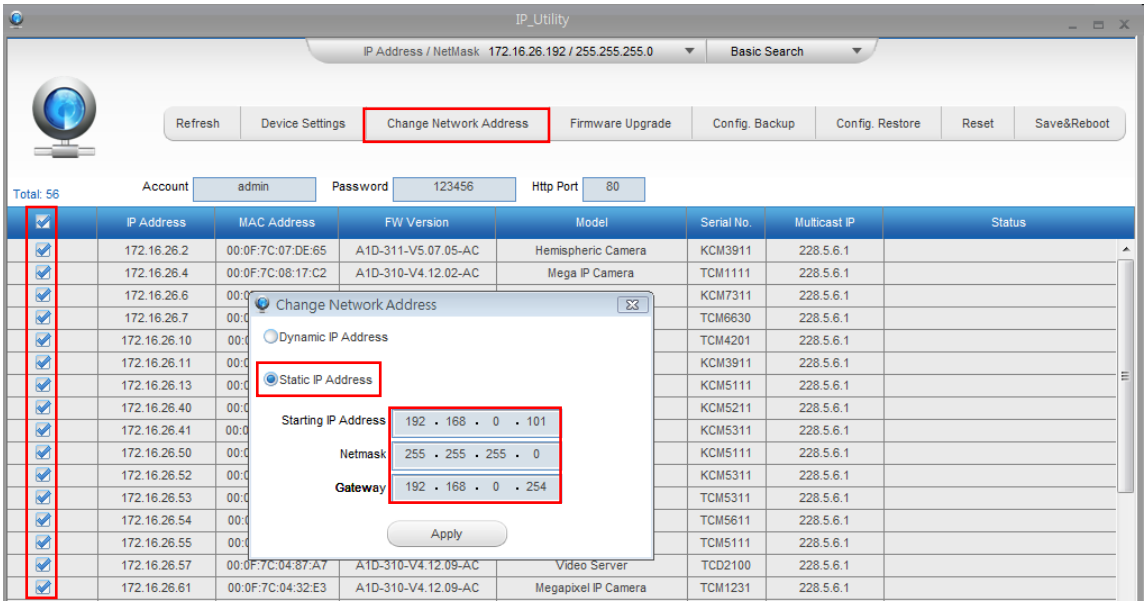

With the procedure shown above, all the cameras will have unique IP addresses, starting from 192.168.0.101. In case there are 20 cameras selected, the last one of the cameras would have the IP 192.168.0.120.

Later, by pressing the “Refresh” button of the IP Utility, you will be able to see the list of cameras with their new IP addresses.

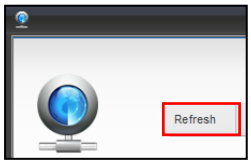

Please note that it is also possible to change the IP addresses manually by using the Web browser. In such case, please plug in only one camera at a time, and change its IP address by using the Web browser before plugging in the next one. This way, the Web browser will not be confused about two devices having the same IP address at the same time.

Access the Camera

Now that the camera and the PC are both having their unique IP addresses and are under the same network segment, it is possible to use the Web browser of the PC to access the camera.

You can use Microsoft Internet Explorer to access the camera

When using Internet Explorer browser, the ActiveX control for video stream management will be downloaded from the camera directly – the user just has to accept the use of such control when prompted so. No other third party utilities are required to be installed in such case.

NOTE: If Windows does not prompt you to install ActiveX, follow these steps to turn off UAC: Click the Start button, and then go to Control Panel. In the search box, type UAC, then click Change User Acount Control Settings. Move the slider to Never Notify position, and then click OK. After UAC is turned off, log in again.

The following examples in this manual are based on Internet Explorer browser in order to cover all functions of the camera.

Assuming that the camera's IP address is 192.168.0.100, you can access it by opening the Web browser and typing the following address into Web browser's address bar:

http://192.168.0.100

Before logging in, you need to setup the root Account and Password of the camera. The password must contain upper and lower case letters, numbers and special characters.

Then use this newly setup Account and Password to login to the Web Configurator.

Copyright © 2021, ACTi Corporation All Rights Reserved

7F, No. 1, Alley 20, Lane 407, Sec. 2, Ti-Ding Blvd., Neihu District, Taipei, Taiwan 114, R.O.C.

TEL : +886-2-2656-2588 FAX : +886-2-2656-2599

Email: sales@acti.com