# Q84

## 20MP (4x5MP) Deep Learning AI LightGuard 5x Outdoor 4-Sensor 360° Dome with IR LED 50m, WDR 130dB

- 20 Megapixel, 5x, 4-Sensor 360° Dome
- Deep Learning AI, LightGuard
- Aperture F1.2, IR LED 50m, Extreme WDR (130 dB)
- Color Min. Illumination 0.002 lux
- Smart Motion Detection, Smart Intrusion Protection
- Counting
- DORI (70.9-247.5 / 28.4-99.0 / 14.2-49.5 / 7.1-24.8m)
- Weatherproof (IP68), Vandal proof (IK10)

## Specifications

### Product Profile

| | |
|---|---|
| Product Type | 4-Sensor 360° Dome |
| Application Environment | Outdoor |
| Maximum Resolution | 20MP |
| Image Sensor | Progressive Scan CMOS (5MP x4) |
| Sensor Size | 1/2.7 " |
| Effective Pixels | 2888(H) X 1628(V) x 4 |
| Day / Night | Yes |
| Low Light Sensitivity | Superior |
| LightGuard | Yes |
| Minimum Illumination | Color: 0.002 lux at F1.2 (AGC on); B/W: 0 lux (IR LED on) |
| Mechanical IR Cut Filter | Yes |
| IR LED | Adaptive IR LED (850 nm) |
| IR Working Distance | 50m |
| Electronic Shutter | 1-1/100000 second (manual mode); 1-1/100000 second (auto mode) |
| S/N Ratio | 75 dB |

## Lens

| | |
|---|---|
| Number of Lenses | 4 Lenses |
| Focal Length | Zoom, f2.7-13.5mm |
| Aperture | F1.2 |
| Zoom Ratio | 5x optical zoom |
| Zoom Application | Camera Installation |
| Iris | Adaptive iris |
| Horizontal Viewing Angle | 110.3° - 31° |
| Vertical Viewing Angle | 57.1° - 17.5° |
| Viewing Angle Adjustment | Pan: 0°-360°, Tilt: 0°-65°, Rotation: 0°-355° |

## Video

| | |
|---|---|
| Compression | H.265 Adaptive Stream, H.264 Adaptive Stream, MJPEG |
| Maximum Frame Rate vs. Resolution | 30 fps at 2880 x 1620 30 fps at 2688 x 1520 30 fps at 2560 x 1440 30 fps at 2304 x 1296 30 fps at 1920 x 1080 30 fps at 1280 x 720 30 fps at 720 x 576 30 fps at 640 x 360 30 fps at 704 x 288 30 fps at 352 x 288 |
| View Mode | Four Channels |
| Multi-Streaming | Simultaneous triple streams |
| Digital Noise Reduction | 2D + 3D DNR |
| Wide Dynamic Range | Extreme WDR (130 dB) |
| Image Orientation | Mirror, Mirror, Rotation (Corridor mode)(±90º, 180º) |
| Image Enhancement | White Balance, Brightness, Contrast, Saturation, Sharpness, Defogging |
| Privacy Mask | Yes, 8 configurable regions (per channel), supports up to 4 channels |
| Text Overlay | Yes |
| Built-in Analytics | Smart Motion Detection (People Detection, Vehicle Detection), Smart Intrusion Protection (, People Line Crossing Detection, People Intrusion Detection, People Enter Area Detection, People Exit Area Detection, Vehicle Line Crossing Detection, Vehicle Intrusion Detection, Vehicle Enter Area Detection, Vehicle Exit Area Detection), Tampering Detection, People Flow Counting, People Density Counting, Crowd Detection |

## Analytics

| | |
|---|---|
| Deep Learning AI | 2.0 |

## Audio

| | |
|---|---|
| Audio Type | 2-way, Built-in Microphone, Line-in, Line-out |
| Audio Compression | G.711 u-law, G.711 A-law |

## Network

| | |
|---|---|
| Network Protocol & Service | IPv4, IPv6, TCP, UDP, DHCP, PPPoE, HTTP, HTTPS, DNS, DDNS, NTP, RTP, RTSP, RTCP, RTMP, SMTP, FTP, IGMP, ICMP, ARP, UPnP, SMTP, SNMP, QoS, SSL/TLS, SSH, IEEE 802.1X |
| Ethernet Port | 1 x Ethernet (10/100/1000 Base-T), RJ-45 connector |
| Security | Password protected user level, IP address filtering, HTTPS encryption, IEEE 802.1X network access control |

## Detection Range

| | |
|---|---|
| Observation Range | Detection: 70.9m-247.5m Observation: 28.4m-99.0m Recognition: 14.2m-49.5m Identification: 7.1m-24.8m |

## Event

| | |
|---|---|
| Event Trigger | Video motion detection, External device through digital input, Sound detection, Tampering detection, Intelligent event detection |
| Event Response | E-mail notification with snapshots, Upload snapshot to FTP server, Save video or snapshot to storage, Activate external device through digital output |

## Integration

| | |
|---|---|
| ONVIF Compliant | Yes, Profile S, Profile G, Profile T, Profile M |
| Web Browser | IE 11, Google Chrome, Microsoft Edge, Firefox |

## Interface

| | |
|---|---|
| Digital Input/Output | 3/2 |

## General

| | |
|---|---|
| Power Source | DC 24V, AC 24V, PoE Type 3 Class 6 (IEEE802.3bt) |
| Power Consumption | 31 W (PoE) |
| Weight | 4770g (10.52lb) |
| Dimensions | (Ø x H): 318mm x 136.6mm (12.52" x 5.38") |
| Environmental Casing | Weatherproof (IP68), Vandal proof metal casing (IK10) |
| Corrosion Protection | Optional for project request. Chassis corrosion resistance at the seashore approximately 3 years. |
| Operating Temperature | -30°C ~ 60°C (-22°F ~ 140°F) |
| Operating Humidity | 5% - 95% RH, non-condensing |
| Surge Protection | 6KV |
| Approvals | CE Class A, FCC Class A, IP68, IK10 (metal casing) |
| Color | White |
| Real-time Clock (RTC) | Yes |
| Warranty | 3 Year(s). For extended warranty offering, see http://www.acti.com/support/warranty |

## Dimension Diagram

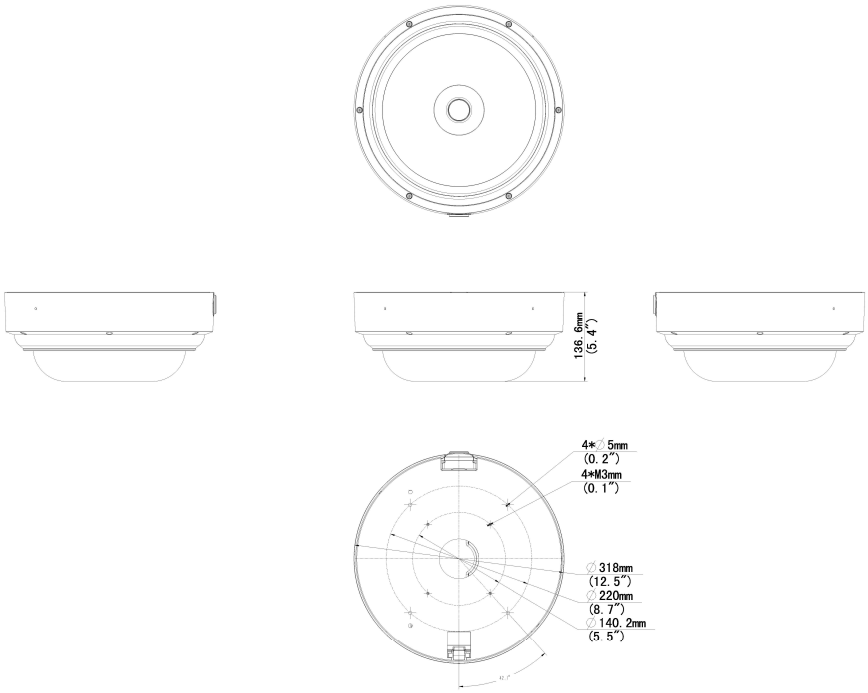


Unit: mm [inch]

## Related Products

### Mounting Accessories - Camera Mount

| | | |
|---|---|---|
| PMAX-0115 | | Pendant Mount (for A950, A951, A952, A956, Z950, Z952) |
| PMAX-0116 | | Straight Tube, 200 mm (for Z950) |
| PMAX-0117 |  | Straight Tube (for Z950, Z952) |
| PMAX-0351 | | Wall Mount (for Z953, K95X, Q84) |
| PMAX-0358 | | Parapet Wall Mount (for Z95X, Q84). |
| PMAX-0404 |  | Corner Mount (for Z950, Z952) |
| PMAX-0513 | | Pole Mount (for Z950, Z952) |
| PMAX-0711 | | Junction box (for Z950, Z952) |

| | | |
|---|---|---|
| PMAX-1407 | | Mount Kit (for Q84) |

**Note**: Some mounting accessories may need additional accessories for installation. Please check www.acti.com/mountingselector for more information.

## Power Supply Accessories - PoE Injector

| | | |
|---|---|---|
| PPOE-0201 | | High PoE Injector Single-port, IEEE 802.3bt Type 4, Gbps, 90W 4-Pairs POE indoor midspans, AC 100~240V, with universal connectors (for Z954, Q83) |
| PPOE-0202 | | High PoE injector 90Watt 10/100/1000M/Multi Gigabit PoE Injector (for A952, A956, Z953, Z954, Q83, Q84) |