ZNR-424

64-Channel 8-Bay RAID 2U Rackmount Standalone NVR



- 64 channels, 64 Free Licenses
- 8 Storage Bay(s)
- Hardware RAID (on Board) 1, 5
- Rack Space: 2U, Rackmount Standalone NVR
- Embedded Linux
- ARM-based embedded SoC
- Audio, Digital Input/Output, HDMI x 1, VGA x 1
- Web Client
- Multi-Browser Support

Specifications

Product Profile

Product Type	Standalone NVR
Maximum Resolution	16MP
Maximum Number of Video Devices	64
Maximum Number of Clients	Local: 1, Remote: 128
Supported Screen Resolution	HDMI: 3840x2160 (30Hz), 1920x1080 (60Hz/50Hz), 1600x1200 (60Hz), 1280x1024 (60Hz), 1280x720 (60Hz), 1024x768 (60Hz) VGA: 1920x1080 (60Hz/50Hz), 1600x1200 (60Hz), 1280x1024 (60Hz), 1280x720 (60Hz), 1024x768 (60Hz)

Hardware

System Architecture	Embedded SoC-based (ARM platform)
CPU	ARM-based embedded SoC

License

License required	No
Free License	64

Live View

Display Layout Mode	1, 4, 6, 8, 9, 16, 25, 36, 64
Fisheye Dewarping	Yes (Live View, Playback)

Local Live View performance	[H.265] 2ch (up to 30 fps at 12MP) 4ch (up to 30 fps at 4K 3840 x 2160) 6ch (up to 30 fps at 5MP) 8ch (up to 30 fps at 4MP) 10ch (up to 30 fps at 3MP) 16ch (up to 30 fps at 2MP 1920 x 1080) 32ch (up to 25 fps at 960p) 36ch (up to 30 fps at 720P) 64ch (at D1) [H.264] 2ch (up to 30 fps at 12MP) 2ch (up to 30 fps at 4K 3840 x 2160) 4ch (up to 30 fps at 5MP) 6ch (up to 30 fps at 4MP) 8ch (up to 30 fps at 3MP) 14ch (up to 30 fps at 2MP 1920 x 1080) 28ch (up to 25 fps at 960p) 30ch (up to 30 fps at 720P) 64ch (at D1)

PTZ

PTZ Control	PTZ Control, Speed Control

Video

Compression	H.265 Adaptive Stream, H.264 Adaptive Stream

Audio

Audio Type	2-way, Line-in, Line-out
Audio Compression	G.711, AAC

Network

Network Protocol & Service	IPv4, IPv6, TCP, UDP, DHCP, PPPoE, HTTP, HTTPS, DNS, DDNS, NTP, RTSP, SMTP, UPnP, TLS 1.2, TLS 1.3, SNMP, IEEE 802.1X
Ethernet Port	2 x Ethernet (10/100/1000 Base-T), RJ-45 connector
Maximum Outgoing Throughput	160 Mbps
Security	TLS v1.2, TLS v1.3 encrypted communication

Recording

Scheduled Recording	Yes
Event Recording	Yes
Manual Recording	Yes
Maximum Recording Throughput	320 Mbps

Search & Playback

Playback Control	Continuous forward and backward playback with speeds 0.125x/0.25x/0.5x/1x/2x/4x/8x/16x, play, pause, stop
Synchronized Playback	16 channels
Video Export	MP4
Snapshot Export	JPEG

Event

Event Trigger	[NVR]: Low disk space, Disk full, Disk not found, SD Card Write Failure, IP address conflict, Network loss. [Video Device]: Video motion detection, Tampering detection, External device through digital input, Sound detection
Event Response	E-mail notification with snapshots, Upload snapshot to FTP server

System

Permission control	128 Remote users, Customizable permissions for user groups
Server Operating System	Embedded Linux

Client PC Operating System	Windows 7, Windows 8, Windows 10
USB	2-Port USB 2.0, 1-Port USB 3.0
Language	English, Traditional Chinese, Japanese, Spanish

Integration

Edge Recording	Automatically restore the lost videos from the memory card of Z-series camera to ZNR server via proprietary protocol integrations after network connection recovery.
ONVIF Compliant	Yes, Profile S, Profile G, Profile T
Web Browser	IE 10 or newer, Google Chrome, Microsoft Edge, Firefox

Storage

Storage Bay	SATA, Max. 8 Disk(s) (without storage disks)
HDD Size	3.5"
Maximum Recording Capacity	24TB x8
RAID Level	Hardware RAID (on Board) 1, 5
Disk Maintenance	S.M.A.R.T. Test

Interface

Serial Port	1 x RS-485
Audio Interface	RCA Jack
Digital Input/Output	16/4
Local Access	USB Mouse
Local Display Interface	HDMI x 1, VGA x 1

General

Power Source	AC 100-240V
Power Consumption	32 W (AC, without HDD)
Weight	4000g (8.80lb)
Dimensions	(W x H x D): 442mm x 89mm x 426mm (17.4" x 3.5" x 16.8") Rack Space: 2U
Bundled Accessories	Rack Bracket
Mount Type	Rackmount
Fan	Yes
Operating Temperature	-10°C ~ 55°C (14°F ~ 131°F)
Operating Humidity	10% - 90% RH, non-condensing
Remote Access	Web Client
Approvals	CE Class B, FCC Class B, BSMI, UL Listed
Color	Black
Warranty	2 Year(s). For extended warranty offering, see http://www.acti.com/support/warranty

* The supported analytics functions depend on the compatible Z-series cameras.

Dimension Diagram

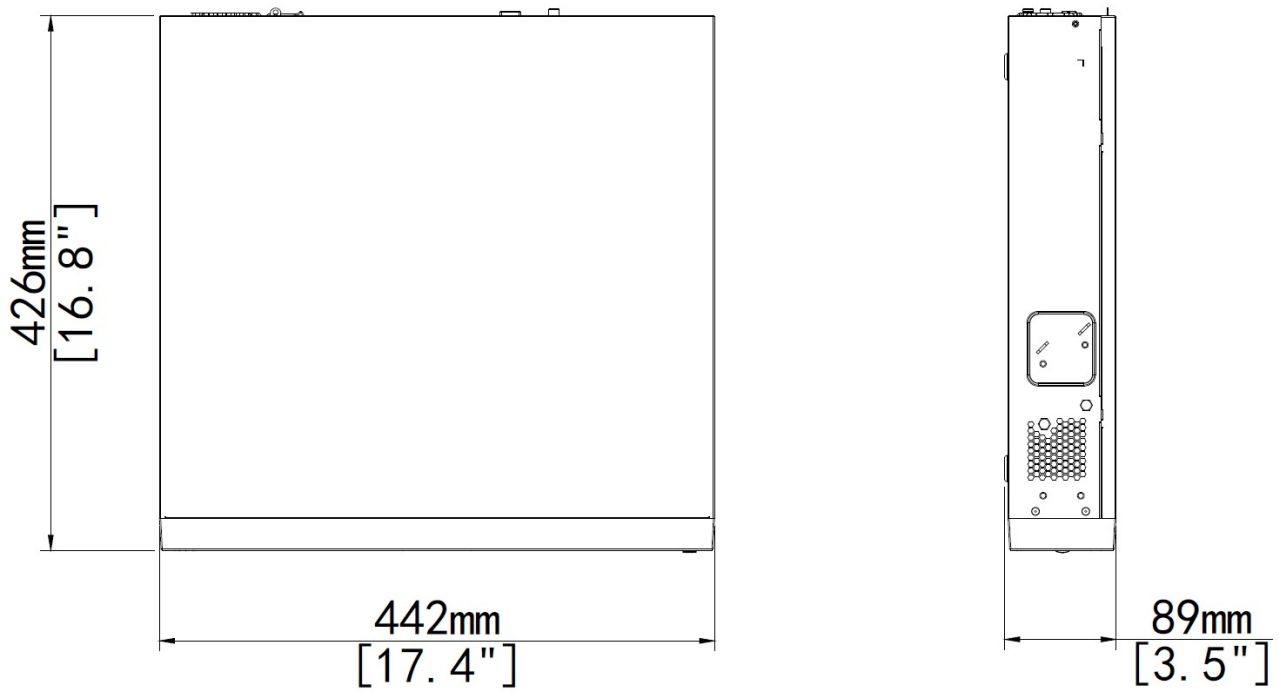

Unit: mm [inch]

Related Products

Network & Storage Peripherals - Hard Disk

PHDD-2200		WD WD1005FBYZ 1TB 3.5" Hard Disk Drive, 7200 RPM 128 MB Cache (for ENR-0x0P, ENR-110, ENR-120, ENR-130, ENR-22x, ENR-22xP, GNR-310, GNR-320, INR-100, INR-340, INR-430, INR-440, INR-450, INR-460)
PHDD-2303		WD Purple 2TB 3.5" SATA Hard Disk Drive, 5400 RPM 64 MB Cache (for ZNR-126, ZNR-127, ZNR-129, ZNR-221P, ZNR-222P, ZNR-224, ZNR-423, ZNR-424, ZNR-425, ZNR-429, ZNR-431, KNR-120, KNR-121, KNR-220P, KNR-420, KNR-421)
PHDD-2501		HGST ULTRASTAR 7K6000 4TB 3.5" Hard Disk Drive, 7200 RPM 128MB Cache (for ENR-1xx, ENR-0x0P, ENR-22x, ENR-22xP)
PHDD-2504		WD Purple 4TB 3.5" SATA Hard Disk Drive, 5400 RPM 128 MB Cache (for ZNR-126, ZNR-127, ZNR-129, ZNR-221P, ZNR-222P, ZNR-224, ZNR-423, ZNR-424, ZNR-425, ZNR-429, ZNR-431, KNR-120, KNR-121, KNR-220P, KNR-420, KNR-421)
PHDD-2702		WD Ultrastar 6TB 3.5" Hard Disk Drive, 7200 RPM 256MB Cache
PHDD-2703		WD Purple 6TB 3.5" SATA Hard Disk Drive, 5400 RPM 256 MB Cache (for ZNR-126, ZNR-127, ZNR-129, ZNR-221P, ZNR-222P, ZNR-224, ZNR-423, ZNR-424, ZNR-425, ZNR-429, ZNR-431, KNR-120, KNR-121, KNR-220P, KNR-420, KNR-421)
PHDD-2900		WD WD8002FRYZ 8 TB 3.5" Hard Disk Drive, 7200 RPM 128 MB Cache (for GNR-310, GNR-320, INR-100, INR-340, INR-410, INR-430, INR-440, INR-450, INR-460)

PHDD-2A00		WD WD101KRYZ 10TB 3.5" Hard Disk Drive, 7200 RPM 256MB Cache (for ENR-xxx, ENR-xxxP, GNR-330, GNR-410, INR-100, INR-340, INR-410, INR-430, INR-440, INR-450, INR-460, INR-470)
PHDD-2B01		HGST ULTRASTAR 7K6000 12TB 3.5" Hard Disk Drive, 7200 RPM 256MB Cache
PHDD-2E01		HGST ULTRASTAR 7K6000 14TB 3.5" Hard Disk Drive, 7200 RPM 512MB Cache
PHDD-2G00		WD Ultrastar 18TB 3.5" Hard Disk Drive, 7200 RPM 512MB Cache
PHDD-2H00		WD Ultrastar 16TB 3.5" Hard Disk Drive, 7200 RPM 512MB Cache
PHDD-2I00		WD Ultrastar 20TB 3.5" Hard Disk Drive, 7200 RPM 512MB Cache
PHDD-2J00		WD Ultrastar 22TB 3.5" Hard Disk Drive, 7200 RPM 512MB Cache
PHDD-2M00		WD Ultrastar 24TB 3.5" Hard Disk Drive, 7200 RPM 512MB Cache

Network & Storage Peripherals - Extended Storage Device

PSTR-0405		QNAP TS-1232PXU-RP-4G 2U 12-Bay NAS RAID Storage Device (for All GNR、ENR、INR and ZNR Series)

Controllers - Joystick

PJSK-0102		Joystick for PTZ Control (for ZNR Series, YVR Series, KNR Series)