PMAX-0729



Junction Box (for Z39, Z310, Z318, Z319, Z322, Z49, Z412, Z413, Z413-P1, Z419)

Specifications

Product Profile

Product Type	Camera Mount
Description	Junction Box (for Z39, Z310, Z318, Z319, Z322, Z49, Z412, Z413, Z413-P1, Z419)

General

Dimensions	(Ø x H): 104.4mm x 54.5mm (4.1" x 2.1")
Color	White
Material	Aluminum alloy
Warranty	1 Year(s)

Dimension Diagram

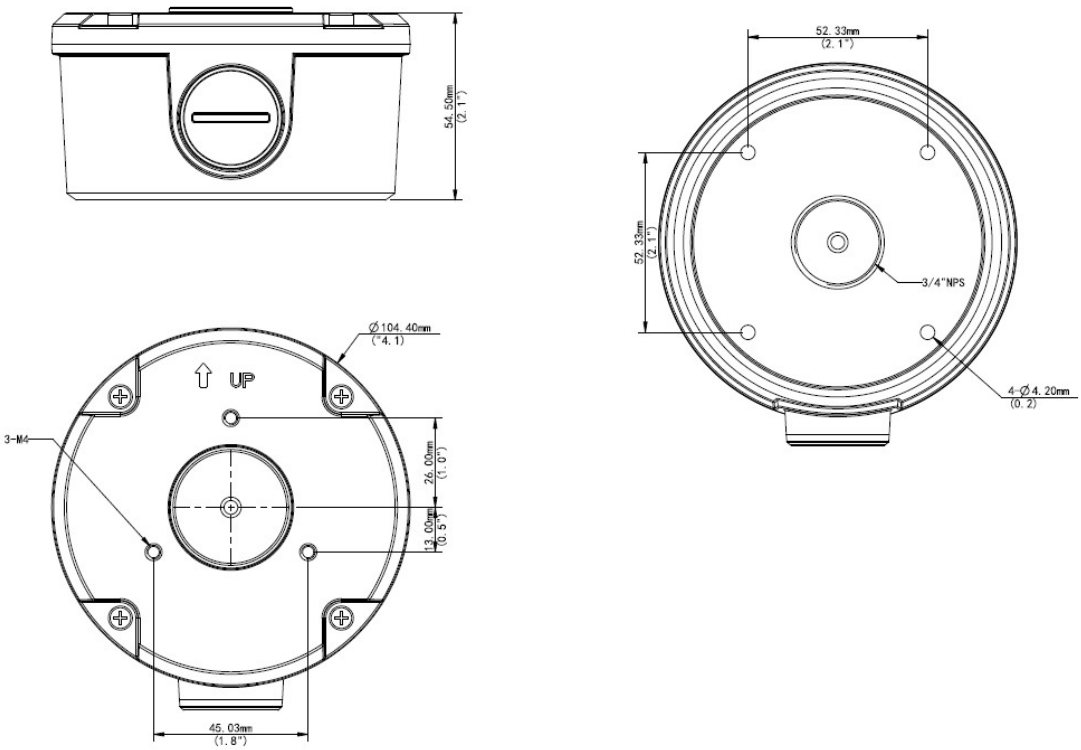

Unit: mm [inch]

Related Products

Bullet - Fixed Bullet

Z315		5MP Mini Bullet with D/N, Adaptive IR, Superior WDR, SLLS, Fixed lens, f2.8mm/F1.6 (HOV:112.9°), H.265/H.264, 2D+3D DNR, Built-in Microphone, PoE/DC12V, IP68
Z318		8MP Mini Bullet with D/N, Adaptive IR, Superior WDR, SLLS, Fixed lens, f2.8mm/F1.6 (HOV:112.9°), H.265/H.264, 1440p/30fps, 2D+3D DNR, Built-in Microphone, PoE/DC12V, IP67
Z319		5MP Mini Bullet with D/N, Adaptive IR, Superior WDR, SLLS, Fixed lens, f2.8mm/F1.6 (HOV:112.9°), H.265/H.264, 2D+3D DNR, Built-in Microphone, PoE/DC12V, IP67
Z322		4MP Outdoor Mini Bullet with D/N, Adaptive IR, White LED (50 meters), Basic WDR, SLLS, Fixed lens, f2.8mm/F1.6 (HOV: 97°), H.265/H.264, 2D+3D DNR, Built-in Microphone, PoE/DC12V, IP67
Z324		4MP Mini Bullet with White LED, Superior WDR, SLLS, Fixed lens, f2.8mm/F1.0 (HOV:110.4°), H.265/H.264, 2D+3D DNR, Built-in Microphone, , PoE/DC12V, IP67
Z325		8MP Mini Bullet with D/N, Adaptive IR, Superior WDR, SLLS, Fixed lens, f2.8mm/F2.0 (HOV:102.1°), H.265/H.264, 1080p/30fps, 2D+3D DNR, Built-in Microphone, PoE/DC12V, IP68, IK10 (metal casing)
Z330		2MP Deep Learning AI ColorGuard f2.8mm Fixed Bullet with IR LED 50m, White LED 50m, Smart Dual Light, WDR 120dB

Z330-P1		2MP Deep Learning AI ColorGuard f4.0mm Fixed Bullet with IR LED 30m, White LED 30m, Smart Dual Light, WDR 120dB
Z331		4MP Deep Learning AI ColorGuard f2.8mm Fixed Bullet with IR LED 50m, White LED 50m, Smart Dual Light, WDR 120dB
Z331-P1		4MP Deep Learning AI ColorGuard f4.0mm Fixed Bullet with IR LED 50m, White LED 50m, Smart Dual Light, WDR 120dB
Z332		5MP Deep Learning AI ColorGuard f2.8mm Fixed Bullet with IR LED 50m, White LED 50m, Smart Dual Light, WDR 130dB

Bullet - Zoom Bullet

J41		2MP Deep Learning AI 4.3x Zoom Bullet with IR LED 60m, WDR 120dB
K41		2MP Deep Learning AI 4.3x Zoom Bullet with IR LED 60m, WDR 130dB
K42		4MP Deep Learning AI 4.3x Zoom Bullet with IR LED 60m, WDR 130dB
K43		5MP Deep Learning AI 4.3x Zoom Bullet with IR LED 60m, WDR 130dB
Z412		2MP Zoom Bullet with D/N, Adaptive IR, Superior WDR, SLLS, 4.3x Zoom lens, f2.8-12mm/F1.6 HOV:103.6°-33.4°), Auto Focus (for installation), H.265/H.264, 1080p/30fps, 2D+3D DNR, Built-in Microphone, PoE/DC12V, IP68, IK10 (metal casing)
Z413		4MP Zoom Bullet with D/N, Adaptive IR, Superior WDR, SLLS, 4.3x Zoom lens, f2.8-12mm/F1.6 (HOV:102.1° - 30.7°), Auto Focus (for installation), H.265/H.264, 2D+3D DNR, Built-in Microphone, PoE/DC12V, IP68
Z413-P1		4MP Zoom Bullet with D/N, Adaptive IR, Superior WDR, SLLS, 4.3x Zoom lens, f2.8-12mm/F1.6 (HOV:102.1° - 30.7°), Auto Focus (for installation), H.265/H.264, 2D+3D DNR, Built-in Microphone + line-in, line out, PoE/DC12V, IP68
Z413-P1-2MP		
Z419		5MP Deep Learning AI 4.3x Zoom Bullet with IR LED 60m, WDR 130dB
Z49		4MP Zoom Bullet with D/N, Adaptive IR, Superior WDR, SLLS, 4.3x Zoom lens, f2.8-12mm/F1.6 (HOV:102.1°-30.7°), Auto Focus (for installation), H.265/H.264, 1440p/30fps, 2D+3D DNR, Built-in Microphone,, PoE/DC12V, IP68, IK10 (metal casing)