PMAX-0728



Junction Box (for Q450, A426)

Specifications

Product Profile

Product Type	Camera Mount
Description	Junction Box (for Q450, A426)

General

Dimensions	(Ø x H): 150mm x 73.5mm (5.91" x 2.89")
Color	White
Warranty	1 Year(s)

Dimension Diagram

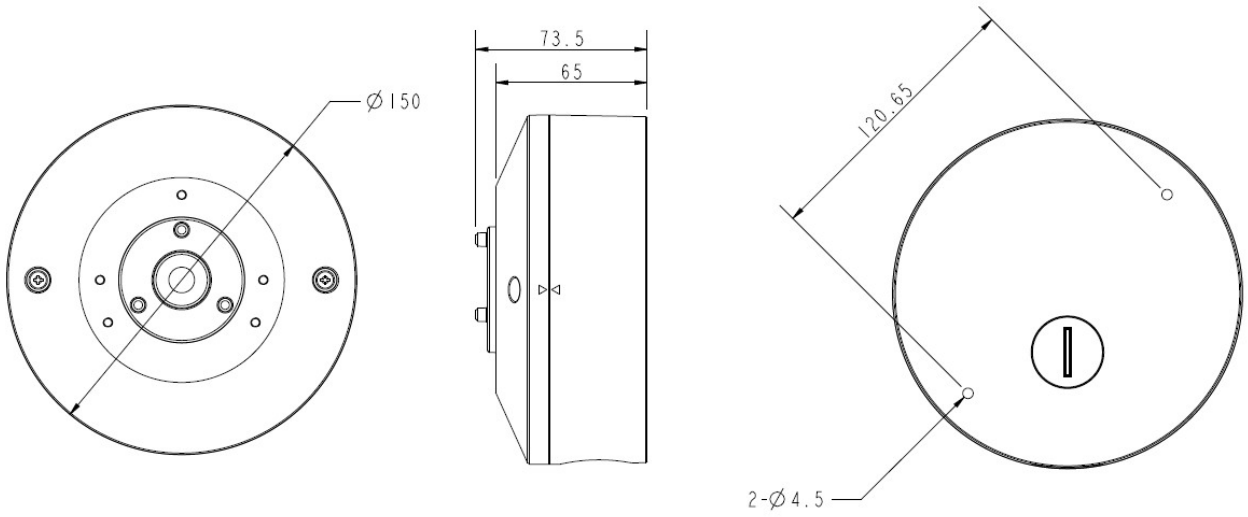

Unit: mm [inch]

Related Products

Bullet - Zoom Bullet

A411		
A412		
A426		5MP Zoom Bullet with D/N, Adaptive IR, Extreme WDR, SLLS, 4.4x Zoom lens, f2.7-12mm/F1.6 (HOV:102.1°-31.5°), P-Iris, Auto Focus, H.265/H.264, 2D+3D DNR, Audio, PoE/DC12V/AC24V, IP66, DI/DO

Multi-Imager - 2-Sensor 180° Bullet

Q450		8MP Multi-Imager Panoramic Bullet with D/N, Adaptive IR, Superior WDR, SLLS, 2 Fixed lenses, f2.8mm (HOV:180°), H.265/H.264, Dewarping