PMAX-0208



PoE Explosion Proof Housing with Heater, Fan and Bracket

Specifications

Product Profile

Product Type	Box Camera Housing
Description	PoE Explosion Proof Housing with Heater, Fan and Bracket

General

Power Source	High PoE (IEEE802.3at)
Power Consumption	High PoE: Max. 25.5W (camera and housing with heater and fan on)
Weight	12550g (27.67lb)
Dimensions	(W x H x D): 479.8mm x 282.5mm x 142.4mm (18.89" x 11.12" x 5.61")
Environmental Casing	Weatherproof (IP68), Explosion proof
Fan	Yes, 40°C / 104°F (fan on), 30°C / 86°F (fan off)
Heater	Yes, 15°C / 59°F (heater on), 24°C / 77°F (heater off)
Approvals	IP68, ATEX II 2G Ex d IIB T6 Gb (EN 60079-0, EN 60079-1), TS Ex d IIC T5 T6 Gb, TS Ex tb IIIC T100°C Db
Color	Silver
Material	Stainless Steel 316
Warranty	1 Year(s)

Dimension Diagram

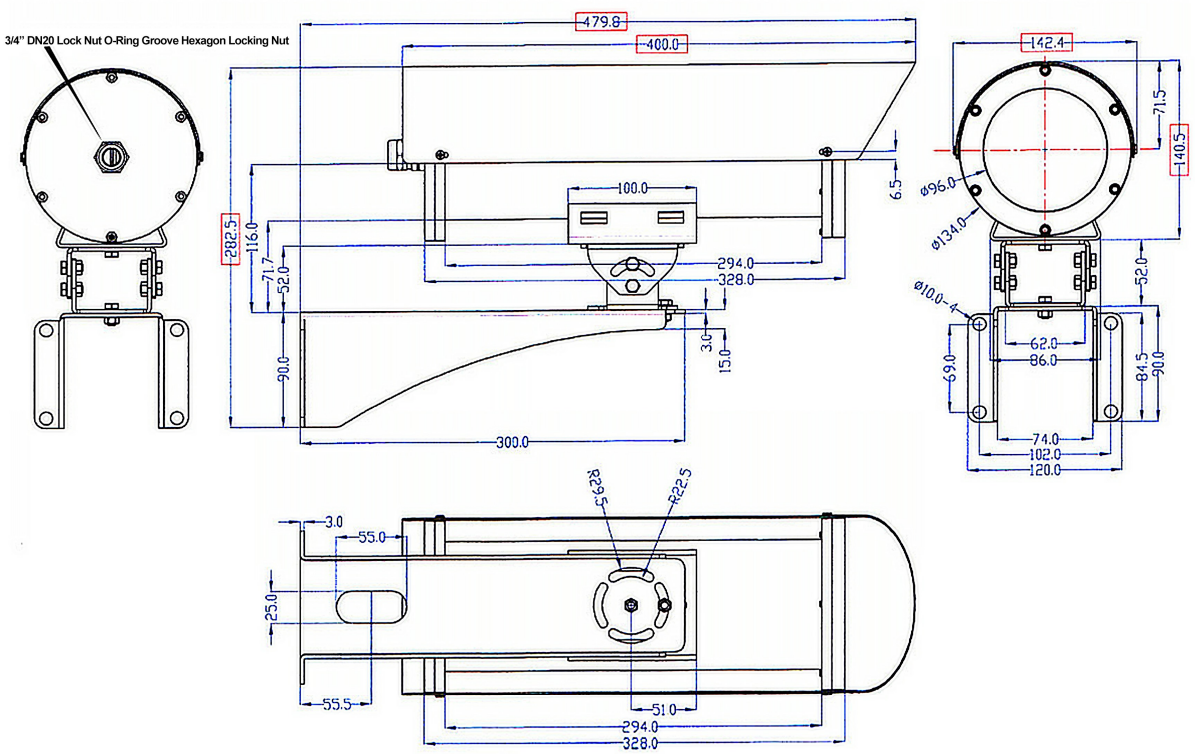

Unit: mm [inch]

Related Products

Box - Fixed Box

A213		5MP Box with D/N, Extreme WDR, ELLS, Fixed lens, f2.8mm/F2.0, Auto Back Focus, H.265/H.264, 2D+3D DNR, Built-in Microphone, PoE/DC12V, DI/DO, RS-485
A29		2MP Box with D/N, Extreme WDR, ELLS, Fixed lens, f2.8mm/F1.8 (HOV:108.6°), Auto Back Focus, H.265/H.264, 1080p/60fps, 2D+3D DNR, Audio, PoE/DC12V, DI/DO, RS-485
E217		2MP Video Analytics Box with D/N, Extreme WDR, SLLS, Fixed lens, f2.93mm/F2.0 (HOV:101.3°), H.264, 1080p/60fps, 2D+3D DNR, Audio, PoE/DC12V, DI/DO, RS-422/RS-485, Built-in Analytics

Box - Zoom Box

A214		5MP Deep Learning AI 40x Zoom Box with WDR 150dB
B26		3MP Video Analytics Zoom Box with D/N, Extreme WDR, SLLS, 36x Zoom lens, f4.6-165.6mm/F1.55-5.0 (HOV:57.6°-2.35°), DC iris, Auto Focus, H.265/H.264, 2D+3D DNR, Audio, PoE/DC12V, DI/DO, RS-422/RS-485, Built-in Analytics

Network & Storage Peripherals - Data Switch

PPSW-0105		PLANET GS-4210-8P2C 8-Port Gigabit 802.3at Managed PoE Switch (PoE Budget 120W)

PPSW-1101		PLANET GS-4210-24PL4C 24-Port Gigabit 802.3at Managed PoE Switch (PoE Budget 440W)
PPSW-3100		PLANET FGSW-1816HPS 16-Port 802.3at PoE Switch (PoE Budget 220W)