PMAX-0116



Extension Tube, 200 mm (for Z95x, K95X, Q84)

Specifications

Product Profile

Product Type	Camera Mount
Description	Extension Tube, 200 mm (for Z95x, K95X, Q84)

General

Weight	386.5g (0.852lb)
Dimensions	(Ø x H): 59mm x 226mm (2.3" x 8.9")
Color	White
Material	Aluminum
Warranty	1 Year(s)

Dimension Diagram

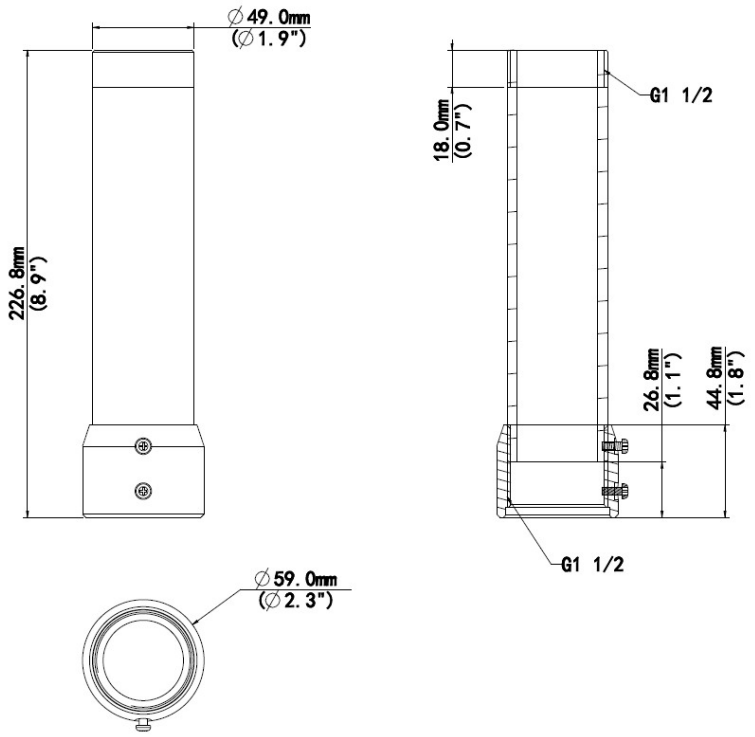

Unit: mm [inch]

Related Products

Multi-Imager - 4-Sensor 360° Dome

Q84		20MP Outdoor Multi-Imager 360 Degree Dome with D/N, IR, four Zoom lenses, f2.7-13.5mm/F1.2 (HOV:110.3°-31°), H.265/H.264, 2D+3D DNR, Built-in Microphone, High PoE/DC24V/AC24V, IP67, IK10, DI/DO

PTZ - PTZ

A952		8MP Outdoor Speed Dome with D/N, IR, Extreme WDR, ELLS, 22x Zoom lens, f6.4-138.5mm/F1.5 (HOV: 62.6°-3.2°), P-Iris, Auto Focus, H.265/H.264, 2D+3D DNR, Audio, High PoE/AC24V, IP66, DI/DO
A955		5MP Deep Learning AI 40x Outdoor Speed Dome with IR LED 250m, WDR 150dB
A956		2MP Outdoor Speed Dome with D/N, IR, Extreme WDR, ELLS, 40x Zoom lens, f4.3-170mm/F1.6 (HOV: 66.1°-1.8°), P-Iris, Auto Focus, H.265/H.264, 2D+3D DNR, Audio, High PoE/AC24V, IP66, DI/DO
A957		
A959		
A981		

A984		8MP Deep Learning AI 36x Outdoor PTZ with IR LED 100m, WDR 150dB
K953		5MP Deep Learning AI ColorGuard LightGuard 33x Outdoor PTZ with IR LED 250m, ColorVizion, WDR 145dB
K953-2MP		
K954		5MP Deep Learning AI 42x Outdoor PTZ with IR LED 500m, ColorVizion, WDR 150dB
K958		
Z952		4MP Outdoor Speed Dome with D/N, Adaptive IR, Superior WDR, SLLS, 25x Zoom lens, f4.8-120mm/F1.5-3.8 (HOV: 52.20°-2.74°), Auto Focus, H.265/H.264, 1080p/30fps, 2D+3D DNR, Audio, High PoE/DC12V, IP66, IK10, DI/DO
Z953		8MP Analytics Outdoor Speed Dome with D/N, Adaptive IR, Extreme WDR, SLLS, 40x Zoom lens, f5.7-228mm/F1.2-4.6 (HOV: 61.4°-2.15°), Auto Focus, H.265/H.264, 4K/30fps, 2D+3D DNR, Audio, High PoE/DC24V/AC24V, IP66, DI/DO
Z954		8MP Outdoor Speed Dome with D/N, Adaptive IR, Superior WDR, SLLS, 25x Zoom lens, f6-150mm/F1.5-3.4 (HOV: 60.5°-3.1°), Auto Focus, H.265/H.264, 4K/30fps, 2D+3D DNR, Audio, High PoE/DC24V/AC24V, IP66, DI/DO
Z956		4MP Outdoor Speed Dome with D/N, Extreme WDR, SLLS, 33x Zoom lens, f4.5-148.5mm/F1.5-4.0 (HOV: 51.4°-2.5°), Auto Focus, H.265, 3D DNR, Audio, High PoE/DC24V/AC24V, IP67, IK10, DI/DO, RS-485
Z957		4MP Outdoor Speed Dome with D/N, Adaptive IR, Extreme WDR, ELLS, 33x Zoom lens, f4.5-148.5mm/F1.5-4.0 (HOV: 51.4°-2.5°), Auto Focus, H.265/H.264, 2D+3D DNR, Audio, High PoE/DC24V/AC24V, IP66, IK10, DI/DO, RS-485
Z958		2MP Outdoor Speed Dome with D/N, Adaptive IR, Extreme WDR, ELLS, 16x Zoom lens, f5.0-80mm/F1.7-2.8 (HOV: 51.7°-4.89°), Auto Focus, H.265/H.264, 2D+3D DNR, High PoE/DC12V, IP66, IK10
Z959		4MP Outdoor Speed Dome with D/N, Adaptive IR, Extreme WDR, ELLS, 16x Zoom lens, f5.5-88mm/F1.78-3.73 (HOV: 50.85°-3.47°), Auto Focus, H.265/H.264, 2D+3D DNR, Audio, High PoE/DC12V, IP66, IK10, DI/DO, RS-485