E12

3MP Cube with Basic WDR, Fixed Lens

* The bracket is included.

- 3 Megapixel with 1080p
- Fixed Lens with f2.8mm / F2.0
- Basic WDR (74 dB)
- 30 fps at 1920 x 1080
- Wide Angle

PHOTO INDICATION

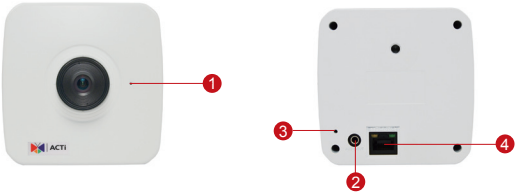

1. Built-in Microphone
2. Audio Output
3. Reset Button
4. Ethernet Port

DIMENSION DIAGRAM

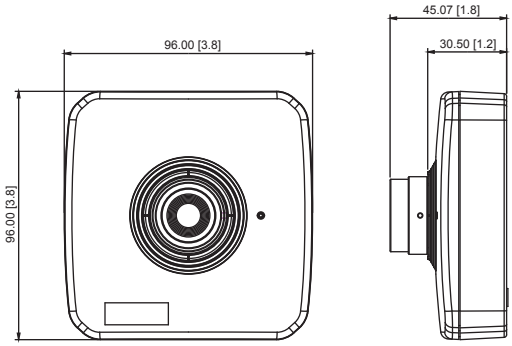

Unit: mm [inch]

ACCESSORY OPTIONS

Lens		
PLEN-0101		IR Compatible, Fixed Iris, F1.8, f4.2mm, 62°
PLEN-0131		IR Compatible, Fixed Iris, F1.4, f2.8~12 mm, 73.1°~28.8°

Power Supply		
PPOE-0001		IEEE 802.3af PoE Injector for Class 1, 2 or 3 devices, with universal adapter

PRODUCT SPECIFICATION

	E12
• Device	
Device Type	Cube Camera
Image Sensor	Progressive Scan CMOS
Sensor Size	1/3.2"
Effective Pixels	2592 (H) x 1944 (V) (5.04 MP)
Day / Night	No
Low Light Sensitivity	Standard
Minimum Illumination	Color: 0.1 lux at F2.0 (30 IRE, 2400 °K)
Mechanical IR Cut Filter	No
IR Sensitivity Range	No
Electronic Shutter	1/5 ~ 1/2,000 sec (manual mode); 1/5 ~ 1/10,000 sec (auto mode)
TV Lines	1350
S/N Ratio	52 dB
• Lens	
Focal Length / Aperture	Fixed focal, f2.8mm / F2.0
Iris	Fixed iris
Focus	Manual focus
Lens Mount	CS mount (interchangeable lens)
Horizontal Viewing Angle	92.6°
• Video	
Compression	H.264 (Baseline / Main / High profile), MJPEG
Max. Frame Rate vs. Resolution	15 fps at 2048 x 1536; 30 fps at 1920 x 1080; 30 fps at 1280 x 720; 30 fps at 800 x 600; 30 fps at 640 x 480; 15 fps at 320 x 240
Multi-Streaming	Simultaneous dual streams based on two configurations
Bit Rate	28 Kbps - 6 Mbps (per stream)
Bit Rate Mode	Constant, Variable
Image Enhancement	Basic WDR (74 dB); White balance: automatic, hold, and manual; Brightness; Contrast; Sharpness (auto); Auto gain control; Digital noise reduction; Flickerless
Privacy Mask	4 configurable regions
Text Overlay	User defined text on video
Image Orientation	Image flip and mirror
• Audio	
Compression	8kHz, Mono, PCM, 16 bit encoding; G.711
Audio-In	Built-in Microphone
Audio-Out	3.5mm Phone Jack
• Network	
Protocol & Service	TCP, UDP, HTTP, HTTPS, DHCP, PPPoE, RTP, RTSP, IPv4, IPv6, DNS, DDNS, NTP, ICMP, ARP, IGMP, SMTP, FTP, UPnP, SNMP, Bonjour
Ethernet Port	1, Ethernet (10/100 Base-T), RJ-45 connector
Security	IP address filtering; HTTPs encryption; Password protected user levels; Anonymous login; IEEE802.1X network access control
• Alarm	
Alarm Trigger	Video motion detection (3 regions); Sound detection
Alarm Response	Notify control center; Change camera settings; Command other devices; E-mail notification with snapshots; Upload video or snapshot to FTP server
• General	
Power Source / Consumption	PoE Class 2 (IEEE802.3af) / 3.67 W
Weight	205 g (0.45 lb)
Dimensions (W x H x D)	96mm x 96mm x 45.07mm (3.8" x 3.8" x 1.8")
Bundled Accessories	Bracket
Mount Type	Wall, Ceiling
Starting Temperature	-10°C ~ 45°C (14°F ~ 113°F)
Operating Temperature	-10°C ~ 45°C (14°F ~ 113°F)
Operating Humidity	10% ~ 85% RH
Approvals	CE (EN 55022 Class B, EN 55024), FCC (Part15 Subpart B Class B), UL (for optional PoE injector)
• Integration	
Unified Solution	Fully compatible with ACTi software
ISV Integration	Software Development Kit (SDK) available; ONVIF compliant
GPS Position	Manual setting
Firmware Access Browser	Microsoft Internet Explorer 8.0 or newer (full functionality) Safari with QuickTime installed, and other browsers with VLC installed (partial functionality)

* All specifications are subject to change without notice.
* All brand names and registered trademarks are the property of their respective owners.