E17

3MP f2.8mm Fixed Cube with WDR 142dB



- 3 Megapixel, f2.8mm, Fixed Cube
- Extreme WDR (142 dB)
- Color Min. Illumination 0.003 lux

Specifications

Product Profile

Product Type	Fixed Cube
Application Environment	Indoor
Maximum Resolution	3MP
Image Sensor	Progressive Scan CMOS
Sensor Size	1/2.8 "
Effective Pixels	2065(H) X 1553(V) (3.21 MP)
Day / Night	No
Low Light Sensitivity	Superior
Minimum Illumination	Color: 0.003 lux
Mechanical IR Cut Filter	No
Horizontal Resolution (TV Lines)	1300 TVL
S/N Ratio	75 dB

Lens

Focal Length	Fixed focal, f2.8mm
Aperture	F1.8

Iris	Fixed iris
Focus	Fixed focus
Lens Mount	CS Mount (interchangeable lens)
Horizontal Viewing Angle	100.5°
Vertical Viewing Angle	76.4°

Video

Compression	H.265, H.264 (Baseline/ Main/ High profile), MJPEG
Maximum Frame Rate vs. Resolution	30 fps at 2048 x 1536 30 fps at 1920 x 1080 30 fps at 1280 x 720 30 fps at 800 x 600 30 fps at 720 x 480 30 fps at 640 x 480 30 fps at 320 x 240
Bit Rate	28Kbps - 12Mbps
Bit Rate Mode	Constant, Variable
Multi-Streaming	Simultaneous triple streams
Digital Noise Reduction	2D + 3D DNR
Wide Dynamic Range	Extreme WDR (142 dB)
Image Orientation	Flip, Mirror, Rotation (Corridor mode)
Image Enhancement	White Balance, Brightness, Contrast, Sharpness, Automatic gain control (AGC), Flickerless, Digital Image Stabilizer (DIS, EIS), Defogging
On-Screen Graphics (Picture Overlay)	Yes
Built-in Analytics	Tampering Detection
Server-based Analytics	Object Line Counting, People Counting, Face Detection, Object Based Motion Detection, Tamper, Object Line Crossing Detection, Object Enter Area Detection, Missing Object Detection, Unattended Object Detection, Smoke Detection, Heat Map, Dwell Time, People Queue Detection, (Require PC-based or standalone IVS or ALPR Server. Contact ACTi support for recommendations on how to maximize analytical accuracy)

Audio

Audio Type	2-way, Built-in Microphone, Line-out
Audio Compression	8 kHz, Mono, G.711

Network

Network Protocol & Service	IPv4/v6, TCP, UDP, DHCP, PPPoE, HTTP, HTTPS, DNS, DDNS, NTP, RTP, RTSP, RTCP, SMTP, FTP, IGMP, ICMP, ARP, Bonjour, UPnP, QoS, SNMP
Ethernet Port	1 x RJ-45 connector
Security	IP address filtering, HTTPS encryption, Password protected user level, Anonymous login

Event

Event Trigger	Video motion detection (3 regions), Sound detection, Tampering detection, Video streams loss
Event Response	Notify control center, Change camera settings, Command other devices, E-mail notification with snapshots, Play the audio file, Push notification to mobile device, Save video to storage, Upload video or snapshot to FTP server

System

Watchdog	Support

Integration

Unified Solution	Fully compatible with ACTi software
GPS Position	Manual setting
Edge Recording	Support (integration with NVR by ONVIF Profile G or proprietary protocol)*
ONVIF Compliant	Yes, Profile S, Profile G, Profile T, Profile Q
Web Browser	IE 11
Auto Firmware Upgrade	Yes

Interface

Operating Button	Reset Button

General

Power Source	PoE Class 2 (IEEE802.3af)
Power Consumption	6.49 W (PoE)
Weight	241g (0.53lb)
Dimensions	(W x H x D): 96mm x 96mm x 45mm (3.8" x 3.8" x 1.8")
Bundled Accessories	Bracket
Mount Type	Bracket
Starting Temperature	-10°C ~ 50°C (14°F ~ 122°F)
Operating Temperature	-10°C ~ 50°C (14°F ~ 122°F)
Approvals	CE Class B, FCC Class B, EAC, UL (for optional PoE injector)
Real-time Clock (RTC)	Yes
Warranty	3 Year(s). For extended warranty offering, see http://www.acti.com/support/warranty

* Edge Recording function is integrated with NVR 3 Corporate / NVR 3 Business / INR / GNR series.

Photo Indication

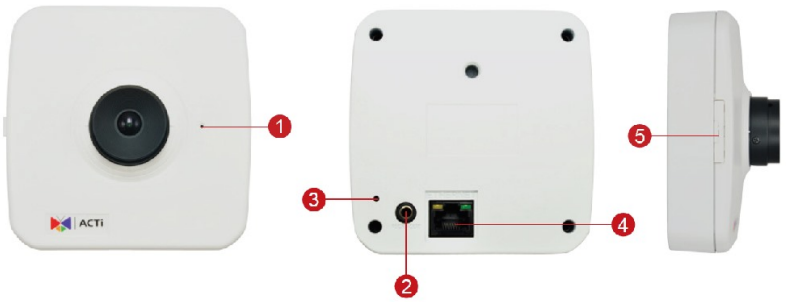

1. Built-in Microphone
2. Audio Output
3. Reset Button
4. Ethernet Port
5. Memory Card Slot

Dimension Diagram

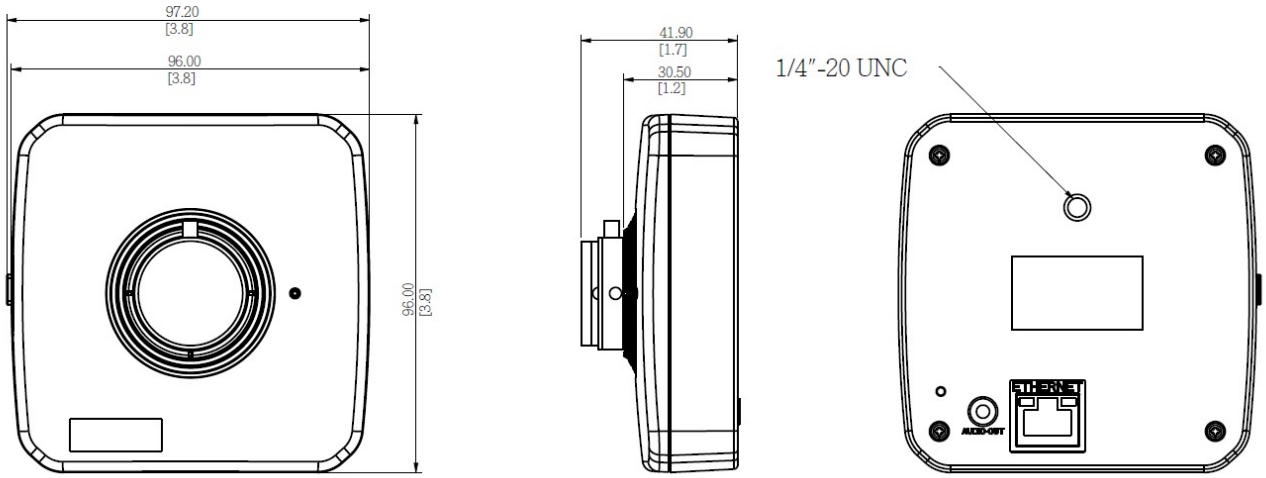

Unit: mm [inch]

Related Products

Network & Storage Peripherals - Data Switch

PPSW-0102		PLANET FGSD-1011HP 8-Port 802.3at PoE Switch (PoE Budget 120W)
PPSW-0105		PLANET GS-4210-8P2C 8-Port Gigabit 802.3at Managed PoE Switch (PoE Budget 120W)
PPSW-1101		PLANET GS-4210-24PL4C 24-Port Gigabit 802.3at Managed PoE Switch (PoE Budget 440W)
PPSW-3100		PLANET FGSW-1816HPS 16-Port 802.3at PoE Switch (PoE Budget 220W)

Extenders - PoE Extender

PPEX-0100		Veracity OUTREACH Max Power over Ethernet (PoE) Extender

Extenders - PoE over Coaxial Extender Kit

PPOC-0100		Planet LRP-101C-KIT Power over Coax Adapter Kit