Speed Dome Camera

Hardware Manual

Z950

2021/10/12

ACTi
Connecting Vision

Table of Contents

Precautions 3

Regulatory Compliance 4
Safety and Compliance Information 5

Introduction 7

List of Models 7
Package Contents 8
Physical Description 8
Cable Connection 9

Installation Procedures 10

Preparing for Installation 10
Install Memory Card (Optional) 11
Mounting on the Wall 11
Waterproof RJ-45 Connector 14
Waterproof Tail Cable 14

Access the Camera 15

Precautions

Read these instructions

Read all the safety and operating instructions before using this product.

Heed all warnings

Adhere to all the warnings on the product and in the instruction manual. Failure to follow the safety instructions given may directly endanger people, cause damage to the system or to other equipment.

Servicing

Do not attempt to service this product yourself as opening or removing covers may expose you to dangerous voltage or other hazards. Refer all servicing to qualified service personnel.

Trademarks

ACTi and ACTi logo are registered trademarks of ACTi Corporation. All other names and products used in this manual are registered trademarks of their respective companies.

Liability

Every reasonable care has been taken during the writing of this manual. Please inform your local office if you find any inaccuracies or omissions. ACTi will not be held responsible for any typographical or technical errors and reserves the right to make changes to the product and manuals without prior notice.

Regulatory Compliance

FCC Part 15

This equipment has been tested and found to comply with the limits for digital device, pursuant to part 15 of the FCC Rules. These limits are designed to provide reasonable protection against harmful interference when the equipment is operated in a commercial environment. This equipment generates, uses, and can radiate radio frequency energy and, if not installed and used in accordance with the instruction manual, may cause harmful interference to radio communications. Operation of this equipment in a residential area is likely to cause harmful interference in which case the user will be required to correct the interference at his own expense.

This product complies with Part 15 of the FCC Rules. Operation is subject to the following two conditions:

- This device may not cause harmful interference.
- This device must accept any interference received, including interference that may cause undesired operation.

LVD/EMC Directive

This product complies with the European Low Voltage Directive 2014/35/EU and EMC Directive 2014/30/EU.

WEEE Directive–2012/19/EU

The product this manual refers to is covered by the Waste Electrical & Electronic Equipment (WEEE) Directive and must be disposed of in a responsible manner.

Safety and Compliance Information

Installation and removal of the unit and its accessories must be carried out by qualified personnel. You must read all of the Safety Instructions supplied with your equipment before installation and operation.

Installation

- This device is a class A product and may cause radio interference. Take measures if necessary.
- Make sure the camera operates in an environment where the temperature and humidity meet requirements. Keep the camera from excessive pressure, vibration, moisture, dust, and intensive electromagnetic radiation.
- Use a power adapter or a PoE device that meets requirements. Otherwise, the device may be damaged.
- Make sure the length of the power cable between the power adapter and the camera is not too long, otherwise the voltage of the camera is lowered, causing the camera to work abnormally. If it is required to lengthen the power cable, lengthen the cable between the power adapter and the mains.
- Do not hold the tail cable by hand for weight bearing. Otherwise, the cable connector of the camera could be loosened.
- Do not cut the tail cable. Exposed tail cables may cause short circuit and damage the camera.
- When connecting to an external interface, use an existing connection terminal, and ensure that the cable terminal (latch or clamp) is in good condition and properly fastened. Ensure that the cable is not tense during mounting, with a proper margin reserved to avoid poor port contact or loosening caused by shock or shake.
- The end of the tail cable must be kept under good protection. Take waterproof measures to protect the tail cable.
- During the process of transportation, special attention is required for the protection of the transparent dome cover to prevent friction, scratch and contamination, etc. In order to keep the cover clean, do not remove the protective film on the cover during mounting. After mounting is finished, remove the film before the device is powered on.
- Contact professionals for maintenance information. Do not attempt to dismantle the device by yourself. We shall not assume any responsibility for problems caused by unauthorized repair or maintenance.

Maintenance

- If there is dust on the front glass surface, remove the dust gently using an oil-free brush or a rubber dust blowing ball.
- If there is grease or a dust stain on the front glass surface, clean the glass surface gently from the center outward using anti-static gloves or an oil-free cloth. If the grease or the stain still cannot be removed, use anti-static gloves or an oil-free cloth dipped with detergent and clean the glass surface gently until it is removed.
- Do not use organic solvents, such as benzene or ethanol when cleaning the transparent dome cover.

- Never look at the transmit laser while the power is on. Never look directly at the fiber ports and the fiber cable ends when they are powered on.
- Use of controls or adjustments to the performance or procedures other than those specified herein may result in hazardous laser emissions.

Introduction

List of Models

This hardware manual contains the following models:

Z950		2MP Outdoor Speed Dome with D/N, Adaptive IR, Extreme WDR, SLLS, 20x Zoom Lens

Package Contents

Contact your local dealer if the package is damaged or incomplete. The attachments may vary with models, please see the actual model for details.

- Camera
- Power Adapter
- Quick Installation Guide
- Accessory Pack
- Bracket Adapter Ring
- Cable Gland

Physical Description

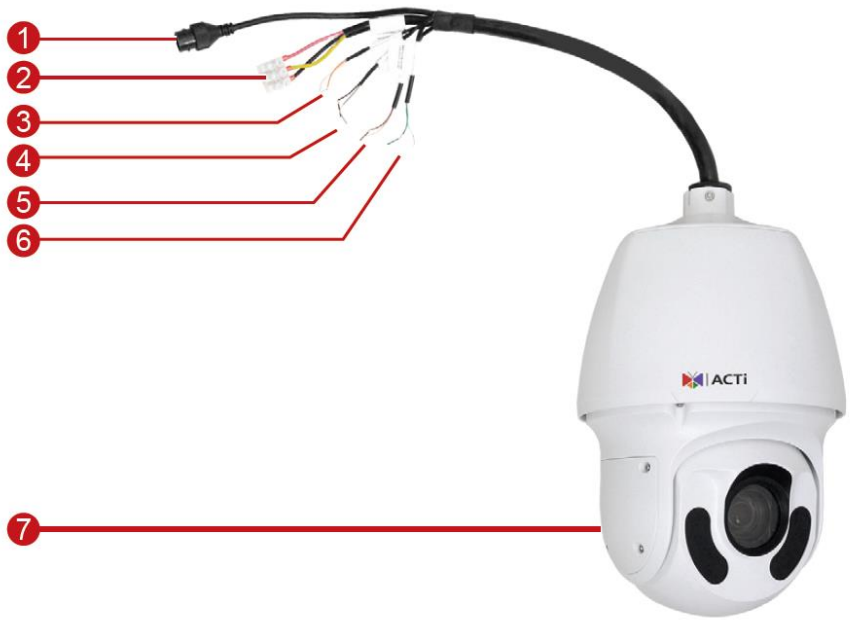

1. Ethernet Port
2. AC24V / DC24V Power Input
3. Digital Output
4. Digital Input
5. Audio Input
6. Audio Output
7. Memory Card Slot (inside the back panel cover)

Cable Connection

All the cables are tagged to indicate their functions. This section takes the full pigtail cable as an example. You can connect cables by referring to the following figure.

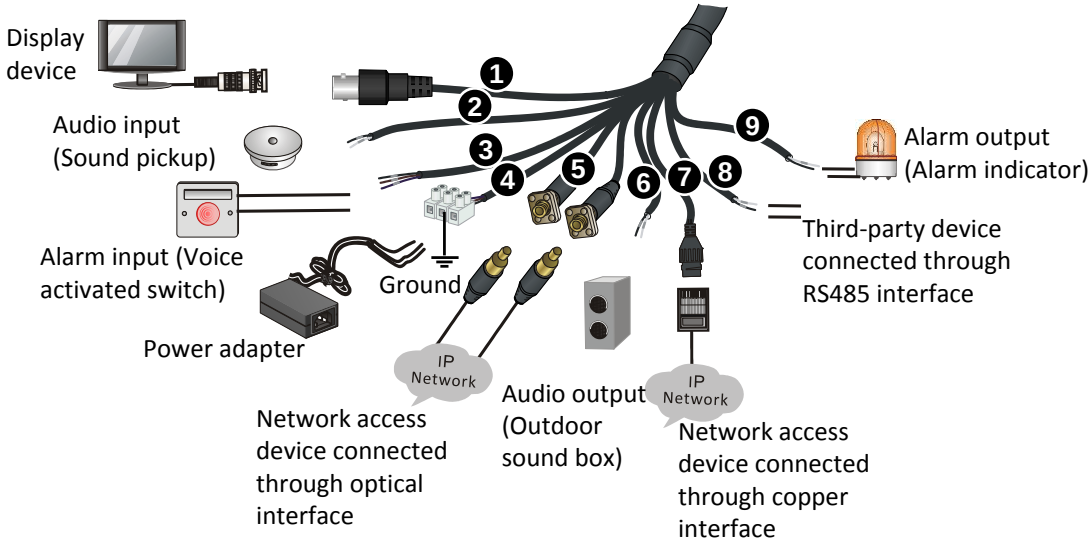

NOTE:

- The above photo is for reference only; depending on the location or time the product is purchased, some components may not be available on the actual product.
- Please disconnect the power before mounting the camera.
- The camera does not provide power for external devices. Make sure to use external power source to power up external devices such as alarm input/output, audio, etc.
- For specifications, see the latest product datasheets.

Installation Procedures

Preparing for Installation

The following figures are for reference only. See the actual product for details.

Before mounting the camera, check the device model, accessory types and quantities against the packing list to ensure the components are complete.

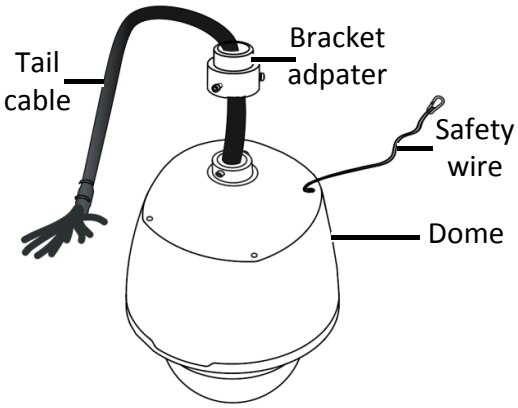

Verify the bearing capacity of the mounted position

Verify that the mounted position meets the bearing requirements. Otherwise, you are advised to reinforce the mounted position for the device weight. For more information, see the product datasheet.

Verify the lightning protection and grounding requirements

- Select proper lightning protection devices for the power supply, audio and video signals interfaces, and RS485 interfaces.

Cable Requirements

10M/100M Ethernet CAT 5/5E UTP cables are applicable to the ANSI/EIA/TIA-568A/B and ISO/D.

Eight wires in the network cable need to be inserted in parallel into the top of the cable connector. The cable connector needs to be crimped in position. When the cable connector is in position, ensure that the metal pieces of the cable connector are parallel to each other and the clamp of the cable connector is intact.

Install Memory Card (Optional)

Install the memory card first, then format the card in the software interface before use. Disconnect the camera from the power before installation, otherwise the camera or the memory card may be damaged.

1. Unscrew the four cross-recessed screws to remove the back cover.
2. Insert the memory card in **Slot 1** as indicated on the figure below.

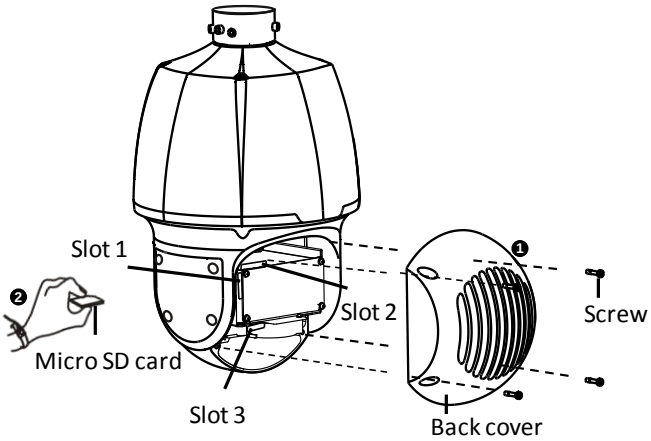

3. Attach the back cover.
4. Properly mount the waterproof ring in position.

Mounting on the Wall

1. Mark the positions of the holes by referring to the mount points of the bracket and lead the cable through the hole on the wall. Then drill holes and knock the expansion bolts.

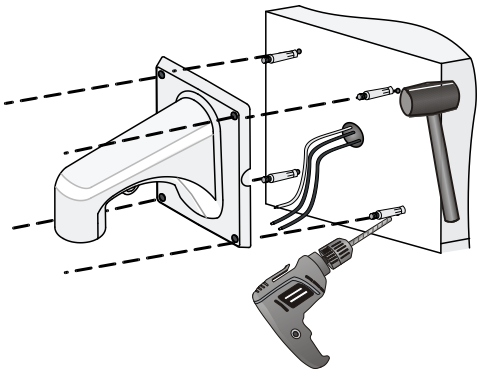

2. Turn the bracket adapter (G1 ½ male thread) in and secure the bracket adapter with a screw.

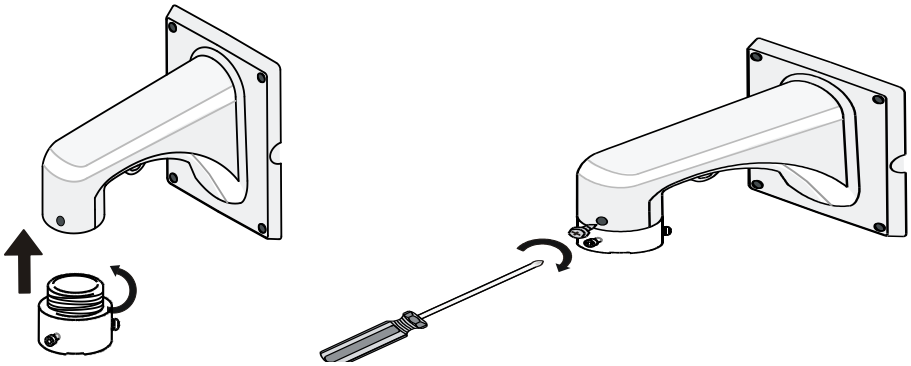

3. Attach the safety wire to the bracket and the dome. And Lead the tail cable through the bracket.

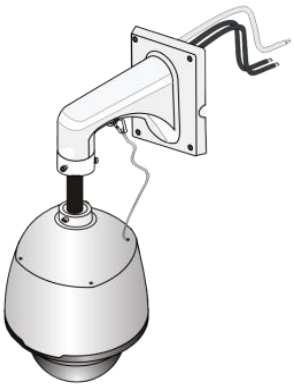

4. Attach the dome to the bracket adapter.
   Slide camera holders into inner track and turn camera till it is blocked by bracket adapter screw.

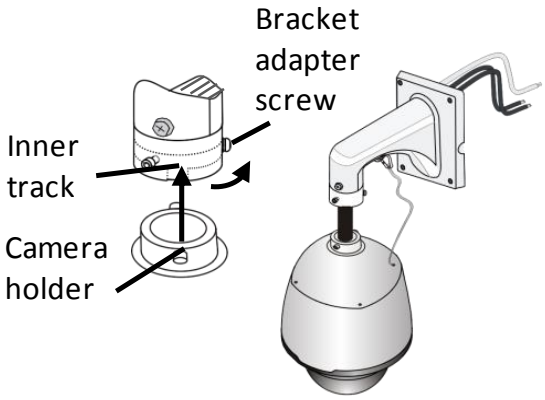

5. Secure the dome with two M5 screws.

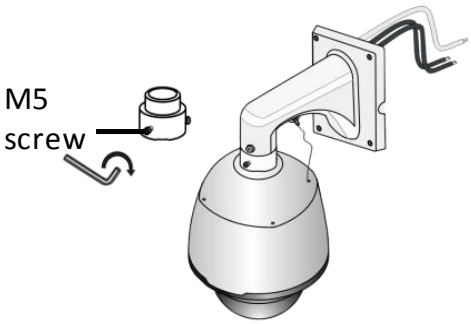

6. Connect the cables and attach the bracket to the wall with flat pads, washers and nuts.

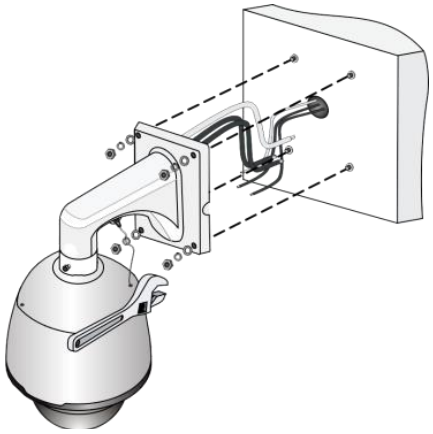

NOTE:

- When mounting the camera, install the bracket adapter to the bracket first and then mount the camera to the bracket.
- Tighten all the screws to hold the camera securely.
- For waterproofing, apply sealant between the camera and the bracket, wall veneer slits, and leading-out holes of the wall.
- The above installation describes concealed installation. To implement open installation, directly lead the cable out from the cable slot on the bracket.

Waterproof RJ-45 Connector

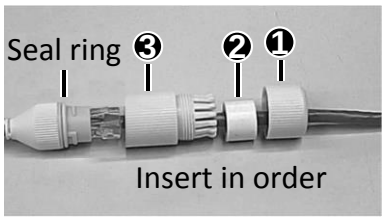

Attach the seal ring to the Ethernet interface. Mount the waterproof components in order. Then insert the cable into the Ethernet interface and screw the waterproof bolt in.

NOTE: You can crimp the inner wires of the cable with the RJ45 plug first and then cover the waterproof components. You may also cover the waterproof components first.

Waterproof Tail Cable

Connect the tail cables and then take the following steps to protect the tail cables from water using waterproof tapes. The figures are for your reference only.

Connect the tail cables, and protect the cables and cable connections using insulating tapes. Then wrap all the tail cables together using insulating tapes.

Choose a start point for waterproof tapes and protect the tail cables using waterproof tapes.

NOTE:

- Avoid short circuit when insulating the cables.
- Use self-adhesive waterproof tapes that will stick together with the twisted cables.
- Tighten waterproof tapes when wrapping the cables and make sure the cable connections are fully covered.
- You are recommended to put the waterproof cables in a waterproof junction box which needs to be purchased separately.

Access the Camera

Before you begin, check that:

- Your camera is operating properly and connected to the network.
- The PC you are using is installed with Internet Explorer 11.

Follow these steps to access your camera through the Web:

1. Open your browser; input the IP address of your camera in the address bar and then press **Enter** to open the login page.
2. Enter the username and password and then click **Login**.

   The factory default Account and Password of the camera:

   Account: **Admin**

   Password: **123456**

NOTE:

- Install the ActiveX at your first login. When the installation of the ActiveX is completed, open your IE to log in.
- For your first login with Windows 7, if the system does not prompt you to install ActiveX, follow these steps to turn off UAC: click the **Start** button, and then click **Control Panel**. In the search box, type **uac**, and then click **Change User Account Control Settings**. Move the slider to the **Never Notify** position, and then click **OK**. After UAC is turned off, log in again.
- If the installation failed, open **Internet Option** in IE before login. Click the **Security** tab, click **Trusted sites**, and then click **Sites** to add the website. If you use Windows 7, you need to save the setup.exe to your PC first, and then right-click the file, select **Run as administrator**, and then install it according to instructions.

Copyright © 2018, ACTi Corporation All Rights Reserved

7F, No. 1, Alley 20, Lane 407, Sec. 2, Ti-Ding Blvd., Neihu District, Taipei, Taiwan 114, R.O.C.

TEL : +886-2-2656-2588 FAX : +886-2-2656-2599

Email: sales@acti.com